ORDER NO. AD9010308C2

Service Manual

COMPACT disc DIGITAL AUDIO

DIGITAL

Compact Disc Player

SL-Z1000

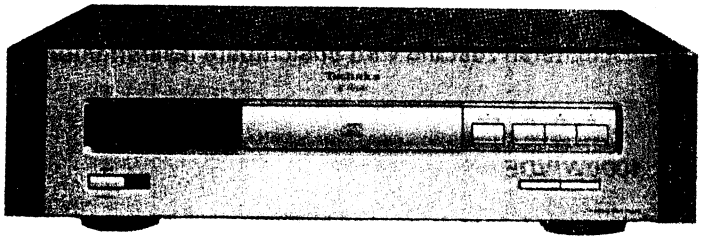

Color

(A)...Gold Type

Area

Country Code	Area	Color
(E)	Continental Europe.	(A)
(EB)	Great Britain.	
(EG)	F.R. Germany & Italy.	

MECHANISM SERIES (RAE0101)

SPECIFICATIONS

■ Spindle motor

Type Brushless DD motor

■ Traverse system

Type High Speed Linear Motor Access System

■ Signal format

Sampling frequency 44.1 kHz
Error correction Technics New Super Decoding Algorithm (8 Samples Linear Interpolation)

■ Pickup

Type Aspherical Surface Glass Press Lens One beam
Beam source Semiconductor laser
Wave length 780 nm

■ General

Power supply AC 50/60 Hz, 110 V/127 V/220 V/240 V
Power consumption 18 W
Dimensions (W×H×D) 484×139×419 mm
Weight 20 kg

Specifications subject to change without notice.
Weight and dimensions shown are approximately.

■ CONTENTS

	Page
PRECAUTION OF LASER DIODE	2
ACCESSORIES	3
CONNECTIONS	3
LOCATION OF CONTROLS	4, 5
DESCRIPTION OF TECHNICAL FEATURES	6, 7
TROUBLESHOOTING GUIDE	7
HANDLING PRECAUTIONS FOR OPTICAL PICKUP	8
INSTRUCTIONS FOR TRAVERSE OIL	8
DISASSEMBLY INSTRUCTIONS	9~15
BEFORE REPAIR	15
MEASUREMENTS AND ADJUSTMENTS	16~20
TERMINAL FUNCTION OF IC'S	21~27
INTERNAL CONNECTION OF FL	28
BLOCK DIAGRAM	29~31
SCHEMATIC DIAGRAM	32~38
PRINTED CIRCUIT BOARDS	39~43
TERMINAL GUIDE OF IC'S, TRANSISTORS AND DIODES	44
WIRING CONNECTION DIAGRAM	45
REPLACEMENT PARTS LIST	46~49
EXPLODED VIEWS	50~53
RESISTORS & CAPACITORS	54, 55
PACKING	56

Technics

■PRECAUTION OF LASER DIODE

CAUTION: This product utilizes a laser diode with the unit turned "on", invisible laser radiation is emitted from the pick up lens.
Wave length: 780nm
Maximum output radiation power from pick up: 100μW/VDE

Laser radiation from the pick up lens is safety level, but be sure the followings:

1. Do not disassemble the optical pick up unit, since radiation from exposed laser diode is dangerous.
2. Do not adjust the variable resistor on the pickup unit. It was already adjusted.
3. Do not look at the focus lens using optical instruments.
4. Recommend not to look at pick up lens for a long time.

ACHTUNG: Dieses produkt enthält eine laserdiode. Im eingeschalteten zustand wird unsichtbare laserstrahlung von der lasereinheit abgestrahlt.

Wellenlänge: 780nm
Maximale strahlungsleistung der lasereinheit: 100μW/VDE

Die strahlung an der lasereinheit ist ungefährlich, wenn folgende punkte beachtet werden:

1. Die lasereinheit nicht zerlegen, da die strahlung an der freigelegten laserdiode gefährlich ist.
2. Den werksseitig justierten einstellregler der lasereinrelt nicht verstellen.
3. Nicht mit optischen instrumenten in die fokussierlinse blicken.
4. Nicht über längere zeit in die fokussierlinse blicken.

ADVARSEL: I dette a apparat anvendes laser.

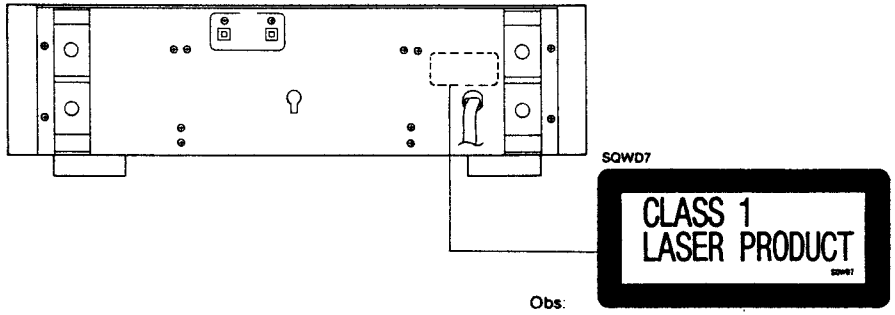

Obs:
Apparaten innehåller laser
Komponent av höger laserklass
än klass 1.

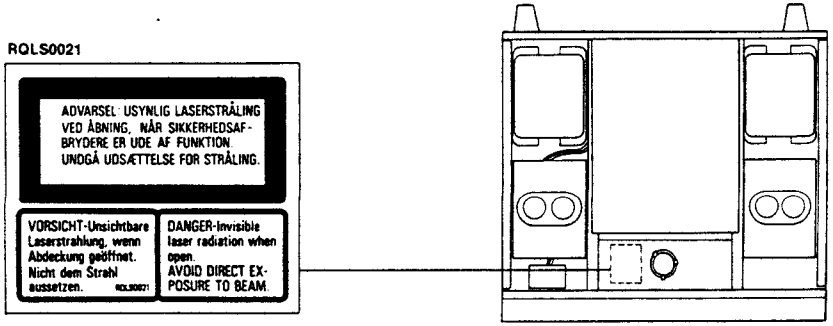

■ACCESSORIES

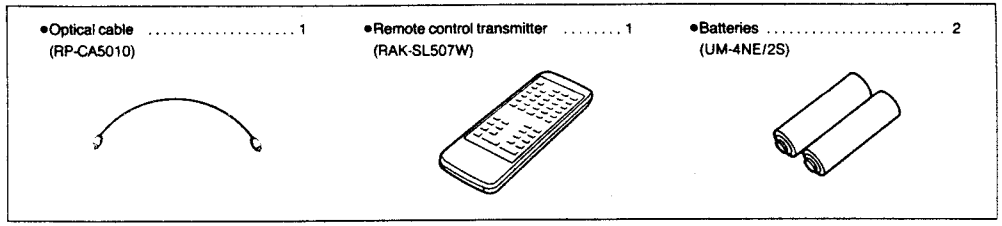

■CONNECTIONS

Turn power off on all components before making connections.

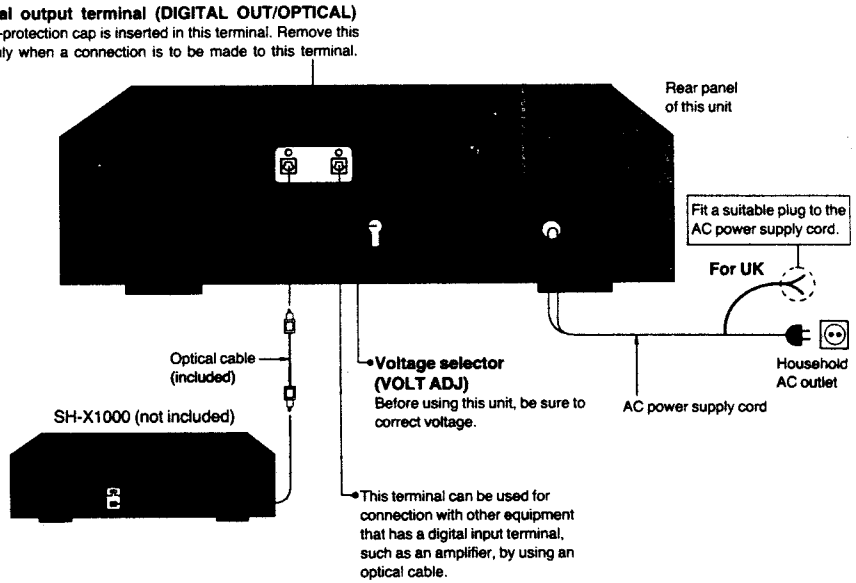

CAUTION
When using the optical cable, please keep the following points in mind:

1. The maximum length of optical cable to be used with this unit is 3 m (approx. 10 ft.).
2. Always make sure the plug is fully inserted. If the plug is not inserted all the way, an imperfect connection will result.
3. The optical cable must never be bent or coiled tightly. Doing so will permanently damage the optical fiber in the cable and, therefore, prevent proper data transmission. If the cable must be coiled (for storage, etc.), the diameter of the loop should be at least 15 cm (approx. 6 inches).
4. Handle the optical cable's plug very carefully. Keep the plug free from dust or damage. Dust can be removed by wiping the plug with a soft cloth. Do not use any cleaners or solvents to clean the plug.

Note:
The configuration of the AC outlet and AC power supply cord differs according to area.

LOCATION OF CONTROLS

The functions indicated by the black numbers (with white background, ④ etc.) can also be activated using the remote control transmitter.

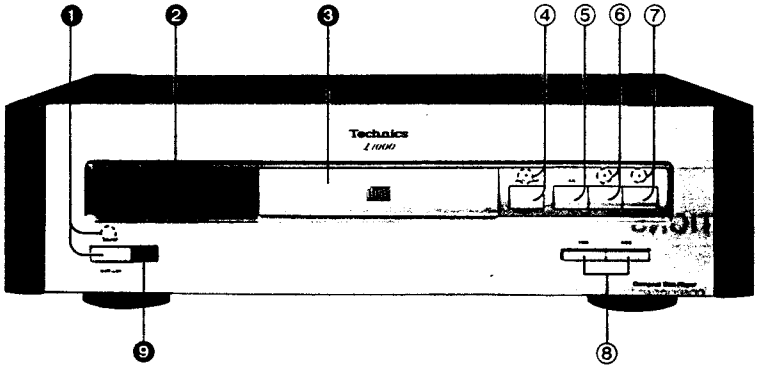

Control section

❶ **Power switch and indicator (power)**

❷ **Display panel**

❸ **Disc holder**

④ **Disc holder open/close button and indicator (open/close)**

⑤ **Stop button (stop)**
This button is used to stop disc play, as well as to cancel the various play modes.

⑥ **Pause button and indicator (pause)**

⑦ **Play button and indicator (play)**

⑧ **Skip buttons (⏮•⏭)**
These buttons are used to skip by track in the forward or reverse direction.

❾ **Remote control signal sensor**

Indicators section

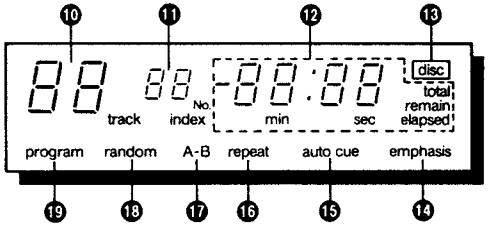

❿ **Track number display (track)**

⓫ **Index/program number display (index/No.)**

⓬ **Time display (min/sec)**
The indicators display the following types of time information.
"total": total elapsed time since the beginning of the disc or total time remaining until the end of the disc, depending on whether the "elapsed" or "remain" indicator is illuminated.
"remain": time remaining until the end of the current selection
"elapsed": time elapsed since the beginning of the current selection

⓭ **Disc indicator (disc)**

⓮ **Emphasis indicator (emphasis)**
This indicator illuminates when discs recorded with pre-emphasis in the high-frequency range are played.

⓯ **Auto cue play indicator (auto cue)**

⓰ **Repeat play indicator (repeat)**

⓱ **A–B repeat play indicator (A–B)**

⓲ **Random play indicator (random)**

⓳ **Program play indicator (program)**

Remote control transmitter

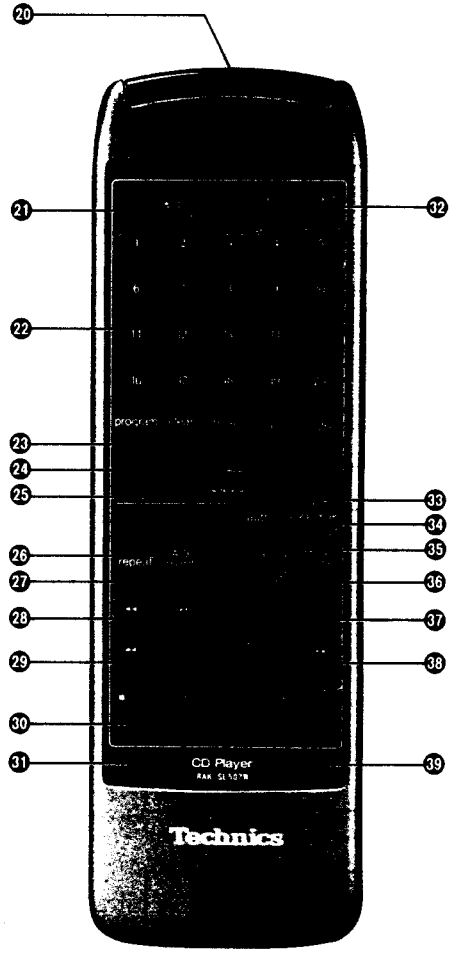

⓴ **Remote control signal transmission window**

㉑ **Disc holder open/close button (⏏ open/close)**

㉒ **Numeric buttons (1~20, 0, >20)**

㉓ **Program button (program)**
Pressing this button initiates the programmed play mode. You can then enter specific tracks using the numeric buttons.

㉔ **Clear button (clear)**
This button is used to clear tracks from the programmed sequence one at a time.

㉕ **Recall button (recall)**
This button is used to display the contents of the programmed track sequence for confirmation.

㉖ **A–B repeat button (A–B repeat)**
This button is used to play a portion of a disc between two points (A and B).

㉗ **Repeat button (repeat)**

㉘ **Slow search buttons (◀◀ slow search ▶▶)**
These buttons can be used to move forward or backward on the disc during play at slow speed.

㉙ **Fast search buttons (◀◀ fast search ▶▶)**
These buttons can be used to move forward or backward on the disc during play at high speed.

㉚ **Stop button (■ stop)**

㉛ **Pause button (❚❚ pause)**

㉜ **Input selectors (CD, aux1, aux2)**

㉝ **Auto cue button (auto cue)**

㉞ **Random play button (random)**
This button is used to play the tracks on a disc in a random sequence.

㉟ **Display switch (display on/off)**
This switch allows you to turn off the display during play if you wish.
The display illuminates for about 5 seconds whenever an operation button is pressed and then switches to off again.
Note:
When the power is first switched on, the "display off" function is reset.

㊱ **Time mode select button (time mode)**

㊲ **Index skip buttons (←index skip→)**
These buttons are used to skip by index number (sub-divisions within the current track).

㊳ **Skip button (⏮ skip ⏭)**

㊴ **Play button (▶ play)**

DESCRIPTION OF TECHNICAL FEATURES

Anti-Vibration Linear Traverse Mechanism and 4-Point Equi-Loaded Floating Optical Deck

In order to increase its anti-vibration performance, this SL-Z1000 CD player features a number of innovations designed to combat vibration not only in the construction of its chassis and panels but also in its traverse mechanism.

Magnetic Attraction Type of Anti-Vibration Linear Traverse Mechanism

When external vibration gives rise to mechanical play in the traverse mechanism of a CD player, the optical pick-up attached to the mechanism can be expected to vibrate in both the focus and tracking directions, with the result that it will be dislodged from the track where it is positioned.
In order to safeguard against this, a metal roller incorporating high-precision ball bearings is employed in the SL-Z1000's traverse mechanism's sub guide section. (See Fig. 1)

What happens is that the metal roller is attracted by a magnet so that it is held tightly against the sub guide shaft, thereby eliminating mechanical play and improving the player's anti-vibration performance.
A comparison between the SL-Z1000 and conventional products reveals an improvement of more than 1G over the entire 10 to 100 Hz range. In fact, the resonance in the mechanism from 50 to 100 Hz which existed in conventional products has been eliminated. (See Fig. 2)

4-Point Equi-Loaded Floating Optical Deck

As a means of canceling out the effects of external vibration transmitted to its optical decks, Technics has for some time now used a floating construction based on a combination of coiled springs and rubber dampers.
However, this system was sometimes characterized by the fact that a different load was subjected to each of the floating supports and that, depending on the vibration mode, the optical deck was subject to torsional vibration.
In order to eliminate this occurrence, the SL-Z1000 features a construction in which the load is equally distributed over the four floating supports. This makes it possible to keep the optical deck horizontal at all times without the problem of torsion arising and also to improve the deck's anti-vibration performance.
The aluminum diecast material used in the panels also contributes to dimensional stability and a high degree of rigidity.

Speed-Controlled soft Loading

When it comes to the actual disc loading, a great deal of attention has been paid to the "feel" of the disc loading and unloading operations, and a design enabling noise-free and smooth movement has been adopted. (See the control block diagram in Fig. 3 and the view of the mechanism in Fig. 4)
When, during the loading operation, the detector switch senses the speed change position before the end position, the microprocessor gradually reduces the drive voltage of the loading motor via the D/A converter. The speed of the motor is detected using the photo-interruptor and slit plate and fed back to the microprocessor. This process enables the movement to be kept stable and constant at all times even in the face of load variations caused by temperature changes and fluctuations in the frictional fore of the mechanism.

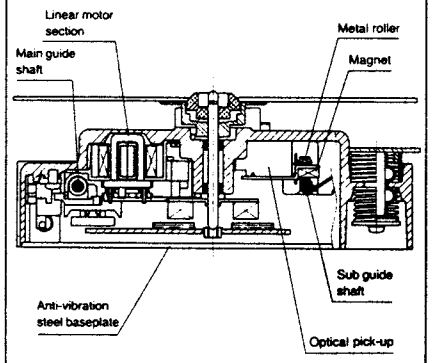

Fig. 1 Internal configuration of optical deck

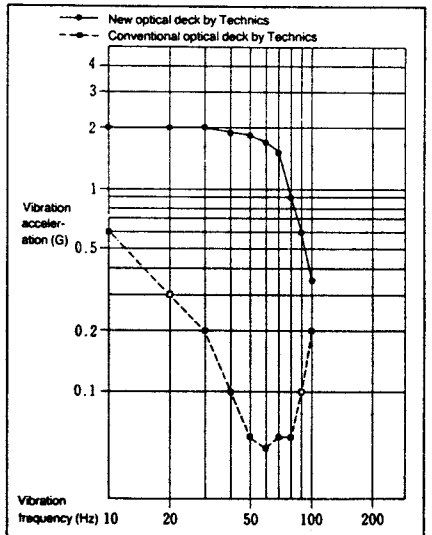

Fig. 2 Anti-vibration characteristics of optical deck

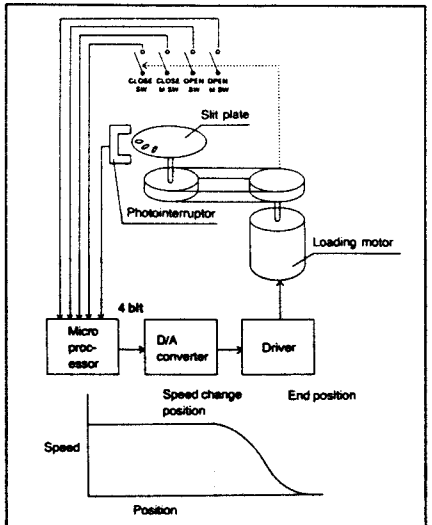

Fig. 3 Loading control block diagram

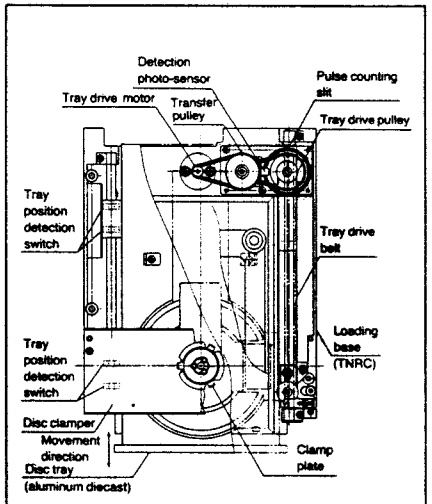

Fig. 4 View of loading mechanism

Disc-Oriented Spindle Acceleration Control

There is a more than 3-fold difference in inertial mass between ordinary 12 cm discs and 8 cm discs. Despite this fact, the same time value from the stop mode to the play mode as that applying with the larger 12 cm discs was demanded in conventional CD players for 8 cm discs with their lower inertial mass. This was because the time taken for the spindle motor to accelerate from the stop mode was aligned with the time optimally suited for the 12 cm discs and, as such, it was not at all appropriate as the acceleration time for the 8 cm discs.
The SL-Z1000 solves this problem by installing a rotary detector (FG) in the DD spindle motor which detects the FG signal cycle and helps to control the acceleration time of the spindle. As a result, the time taken from the stop mode to the play mode can be made the shortest whatever the inertial mass of the discs loaded. (See Fig. 5)

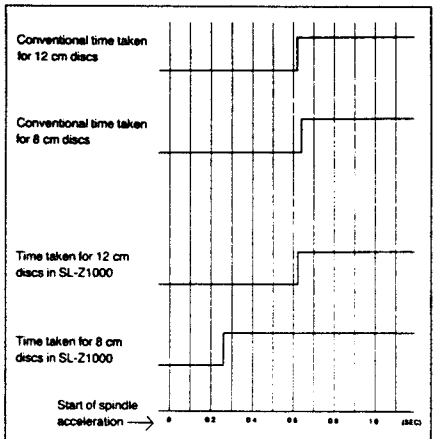

Fig. 5 Time taken to reach play mode from stop mode

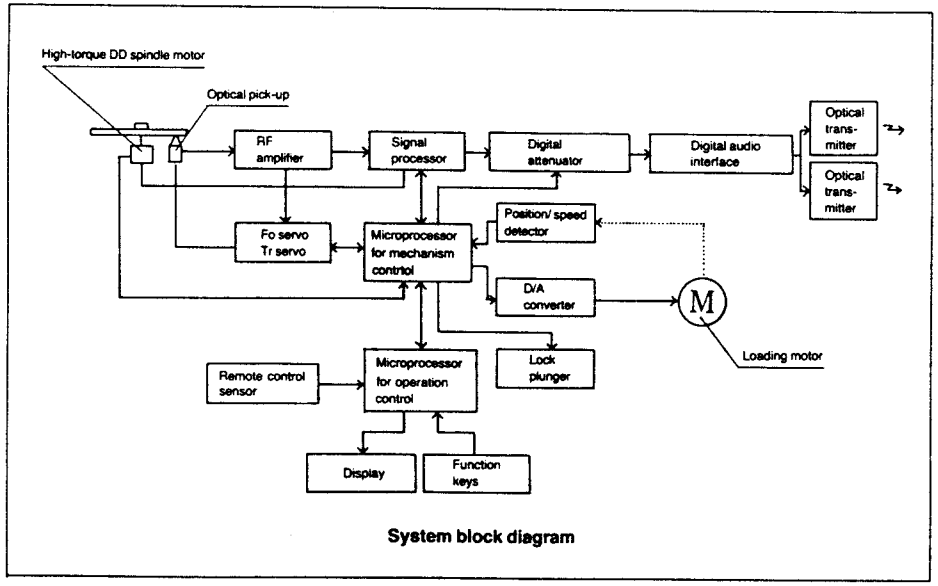

System block diagram

TROUBLESHOOTING GUIDE

Before requesting service for this unit, check the chart below for a possible cause of the problem you are experiencing. Some simple checks or a minor adjustment on your part may eliminate the problem and restore proper operation.
If you are in doubt about some of the check points, or if the remedies indicated in the chart do not solve the problem, refer to the directory of authorized service centers (enclosed with this unit) to locate a convenient service center, or consult your Technics dealer for instructions.

Problem	Probable cause(s)	Suggested remedy
The disc holder does not close when a disc is inserted and the disc holder open/ close button is pressed.	The disc is not properly inserted.	•Take it out and insert it again.
The disc is inserted but the total number of tracks and total playing time are not displayed.	The disc is upside down.	•Check to be sure the label is facing upward.
	The disc is dirty.	•Wipe it with a soft cloth.
	The disc is scratched.	•Replace it with a new disc.
	The disc is warped.	
	The disc is not within specified standards.	•Exchange the disc for another one.
	Moisture has condensed in the unit.	•Switch ON the unit and wait about one hour before using the unit.
A certain MUSIC PASSAGE can't be played correctly.	The disc is dirty.	•Wipe it with a soft cloth.
	The disc is scratched.	•Replace it with a new disc.
Operation by remote control transmitter is not correct.	No disc is loaded.	•Insert the disc.
	The remote control transmitter batteries are consumed.	•Replace them with new batteries.
	The batteries have been inserted incorrectly. [The (+) and (−) polarities are reversed.]	•Insert them so that the polarities are correct.
	There is an obstruction between the remote control transmitter and this unit.	•Remove the obstruction.
Disc play does not start.	The unit is in the auto cue mode.	•Press the play button. •Press the auto cue button to cancel the auto cue mode.

About moisture

Moisture may form on the lens in the following cases...
•Immediately after a heater has been turned on.
•In a steamy or very humid room.
•When the unit is suddenly moved from a cold environment to a warm one.
If moisture forms inside this unit, it may not operate properly. To correct this problem, turn on the power and wait about one hour for the moisture to evaporate.

■ HANDLING PRECAUTIONS FOR OPTICAL PICKUP

The laser diode in the optical pickup may break down due to potential difference caused by static electricity of clothes or human body.
So, be careful of electrostatic breakdown during repair of the optical pickup.

• Handling of optical pickup

1. Do not subject the optical pickup to static electricity as it is extremely sensitive to electrical shock.
2. To prevent the breakdown of the laser diode, an anti-static shorting pin is inserted into the flexible board. (FPC board)
   When removing or connecting the short pin, finish the job in as short time as possible.
3. Take care not to apply excessive stress to the flexible board. (FPC board)
4. Do not turn the variable resistor (laser power adjustment). It has already been adjusted.

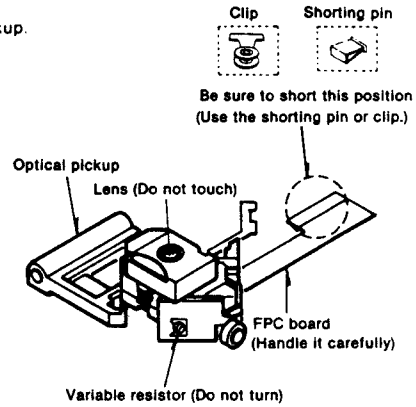

• Grounding for electrostatic breakdown prevention

1. Human body grounding
   Use the anti-static wrist strap to discharge the static electricity from your body.
2. Work table grounding
   Put a conductive material (sheet) or steel sheet on the area where the optical pickup is placed, and ground the sheet.

Caution:
The static electricity of your clothes will not be grounded through the wrist strap. So, take care not to let your clothes touch the optical pickup.

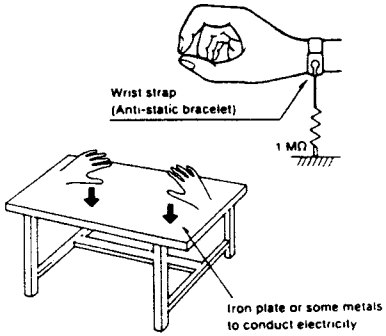

■ INSTRUCTIONS FOR TRAVERSE OIL (Part No. SZZOL31)

The container contains 6g (approx. 3ml) of oil.
One application (one shaft) uses 0.05ml of oil.

How to Use

(1) Remove the guide shaft in the traverse deck from the optical pickup and clean off any dust from the guide shaft.
(2) Apply one drop of the SZZOL31 to the tip of the guide shaft.
(3) Hold the guide shaft so that its oiled end touches the optical pickup and insert it into the bearing while rotating it slowly.
(4) After securing the guide shaft, move the optical pickup by hand several times to the left and right to distribute the oil on the guide shaft.

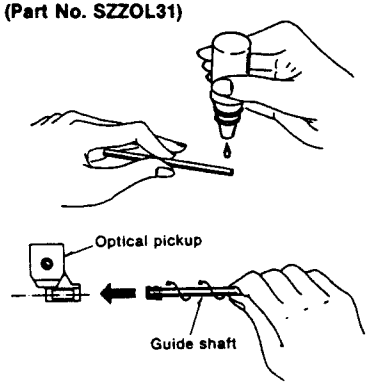

"ATTENTION SERVICER"
Some chassis components may have sharp edges. Be careful when disassembling and servicing.

■ DISASSEMBLY INSTRUCTIONS

Warning: This product uses a laser diode. Refer to caution statements on page 2.
ACHTUNG: • Die lasereinheit nicht zerlegen.
• Die lasereinheit darf nur gegen eine vom hersteller spezifizierte einheit ausgetauscht werden.

Ref. No. 1	Removal of the cabinet
Procedure 1	

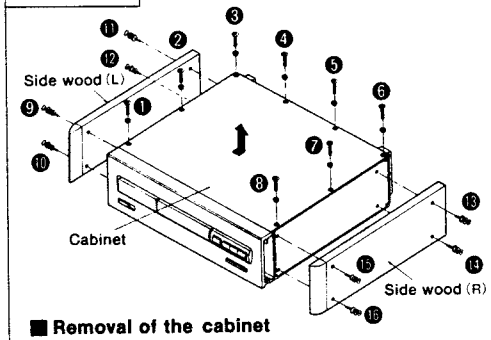

■ Removal of the cabinet

1. Remove the 8 screws (❶~❽).
2. Remove the cabinet in the direction of the arrow.

■ Removal of the side wood (L), (R)

• Remove the 8 screws (❾~⓰).

Ref. No. 3	Removal of the FL P.C.B.
Procedure 1→2→3	

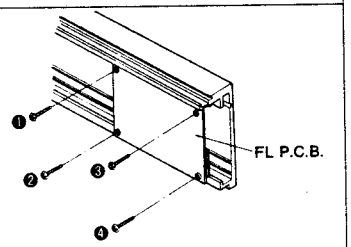

• Remove the 4 screws (❶~❹).

Ref. No. 4	Removal of the operation P.C.B.
Procedure 1→2→4	

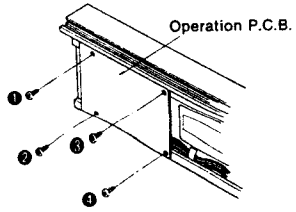

• Remove the 4 screws (❶~❹).

Ref. No. 2	Removal of the front panel
Procedure 1→2	

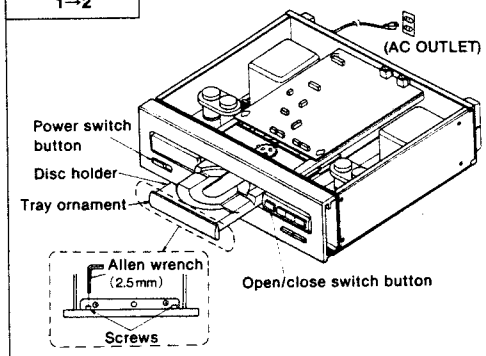

1. Set the power switch in the "ON" position.
2. Push the open/close switch button and pull out the disc holder.
3. Remove the 2 screws set of the tray ornament by using allen wrench and remove the tray ornament.
4. Push the open/close button, and shut the disc holder. Then set the power switch in the "OFF" position.

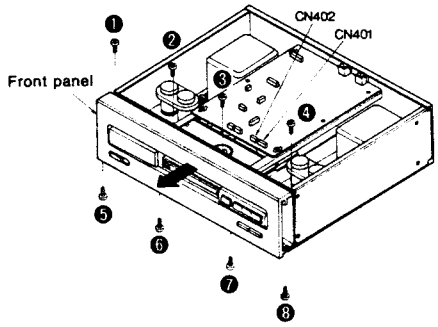

5. Remove the 8 screws (❶~❽).
6. Remove the 2 connectors (CN401, CN402).
7. Remove the front panel in the direction of the arrow.

Ref. No. 5	Removal of the remote control sensor P.C.B.
Procedure 1→2→3→5	

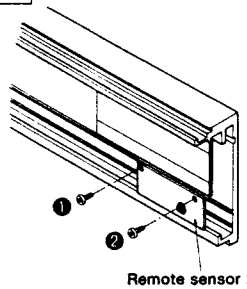

• Remove the 2 screws (❶, ❷).

Ref. No. 7	Removal of the power switch P.C.B.
Procedure 1→2→6→7	

1. Remove the 1 connector (CN1).
2. Remove the 2 screws (❶, ❷).

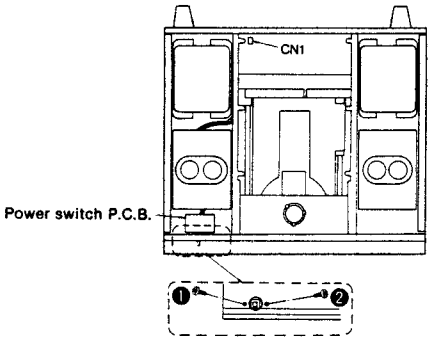

Ref. No. 8	Removal of the power supply P.C.B. (L), (R)
Procedure 1→8	

■ Removal of the power supply P.C.B. (L)

1. Remove the 4 screws (❶~❹).
2. Remove the 2 connectors (CN4, CN11).

■ Removal of the power supply P.C.B. (R)

1. Remove the 4 screws (❺~❽).
2. Remove the 3 connectors (CN5, CN6, CN21).

Ref. No. 6	Removal of the digital P.C.B.
Procedure 1→6	

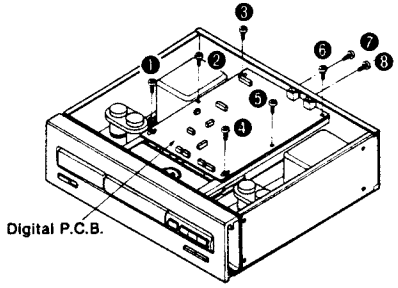

1. Remove the 8 screws (❶~❽).

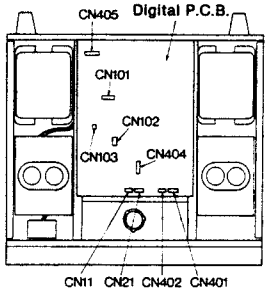

2. Remove the 9 connectors (CN11, CN21, CN101, CN102, CN103, CN401, CN402, CN404, CN405).

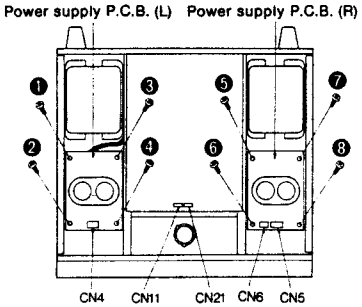

Ref. No. 9	Removal of the power transformer (L), (R)
Procedure 1→6→9	

■ Removal of the power transformer (L)

1. Remove the 4 nuts (❶~❹).
2. Remove the 2 connectors (CN2, CN4).

■ Removal of the power transformer (R)

1. Remove the 4 nuts (❺~❽).
2. Remove the 3 connectors (CN3, CN5, CN6).

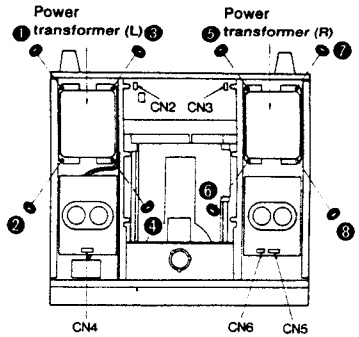

Ref. No. 10	Removal of the side angle (L), (R)
Procedure 1→6→10	• Remove the 6 screws (❶~❻).

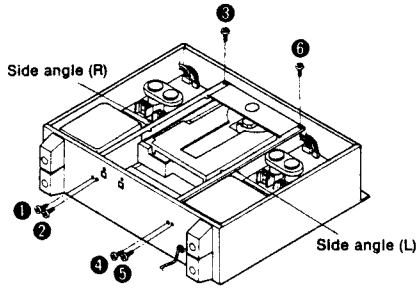

Ref. No. 11	Removal of the power supply P.C.B.
Procedure 1→6→10→11	

1. Remove the 2 screws (❶, ❷).
2. Remove the sheet.
3. Remove the 2 screws (❸, ❹).
4. Remove the 3 connectors (CN1, CN2, CN3).

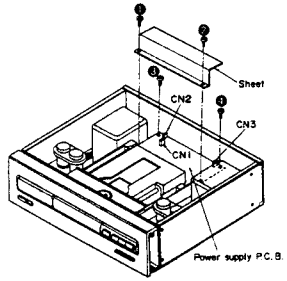

Ref. No. 12	Removal of the clamp chassis
Procedure 1→6→10→12	1. Remove the 2 screws (❶, ❷).

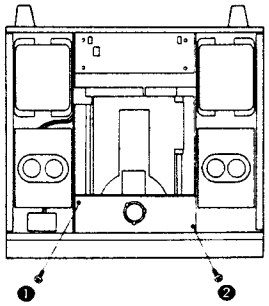

Ref. No. 13	Removal of the yoke, magnet and clamper
Procedure 1→6→10→12 →13	

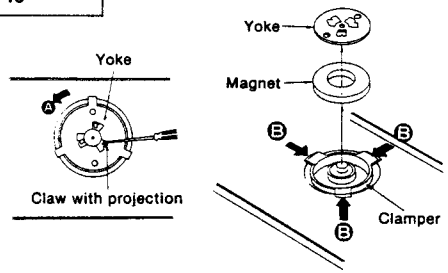

1. While lifting the claw with a screwdriver, rotate clamper in the direction of the arrow Ⓐ and remove the yoke and magnet.
2. Push the claw of the clamper in the direction of the arrow Ⓑ and remove the clamper.

Ref. No. 14	Removal of the loading unit
Procedure 1→2→6→10→12→13→14	• Remove the 4 screws (❶~❹).

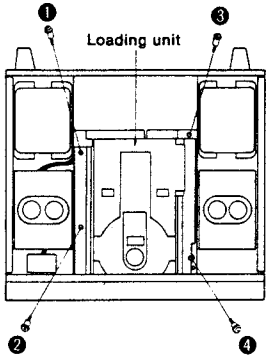

Ref. No. 16	Removal of the loading motor P.C.B.
Procedure 14→16	

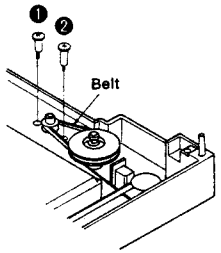

1. Remove the belt.
2. Remove the 2 screws (❶, ❷).

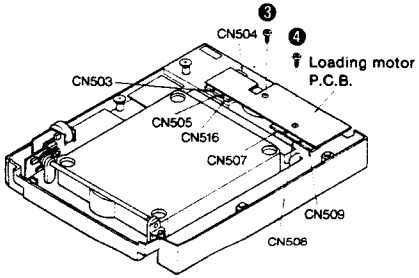

3. Remove the 7 connectors (CN503, CN504, CN505, CN507, CN508, CN509, CN516).
4. Remove the 2 screws (❸, ❹).

Ref. No. 15	Removal of the disc holder
Procedure 14→15	

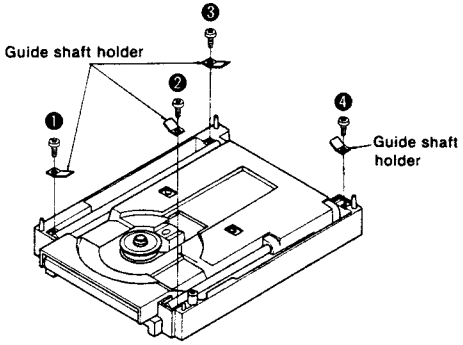

1. Remove the 4 screws (❶~❹).
2. Remove the 4 guide shaft holders.

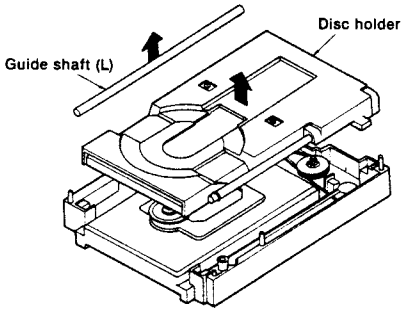

3. Remove the guide shaft (L).
4. Remove the disc holder in the direction of the arrow.

Ref. No. 17	Removal of the open switch P.C.B. and close switch P.C.B.
Procedure 14→17	

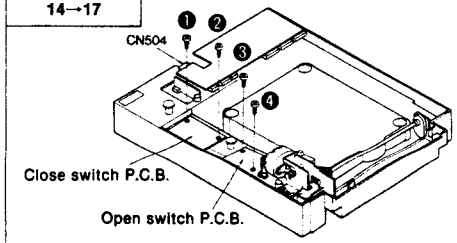

1. Remove the 4 screws (❶~❹).
2. Remove the 1 connector (CN504).

Ref. No. 18	Removal of the up/down motor
Procedure 14→18	

1. Remove the 2 screws (❶, ❷).
2. Remove the 1 connector (CN502).

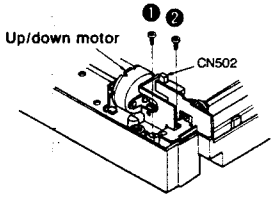

3. Remove the 2 screws (❸, ❹).

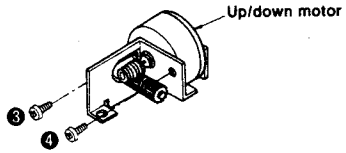

Ref. No. 19	Removal of the up/down switch P.C.B.
Procedure 14→18→19	

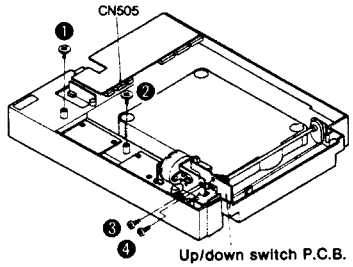

1. Remove the 4 screws (❶~❹).
2. Remove the 1 connector (CN505).

Ref. No. 20	Removal of the sensor P.C.B.
Procedure 14→20	

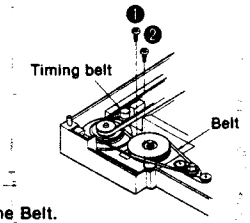

1. Remove the Belt.
2. Remove the 2 screws (❶, ❷).
3. Remove the timing belt.

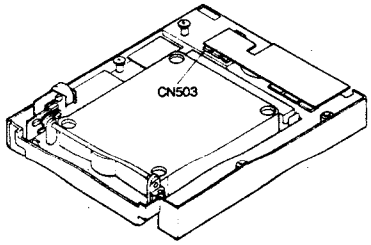

4. Remove the 1 connector (CN503).
5. First remove the washer and next, remove the pulley and belt.
6. Remove the 1 screw (❸).

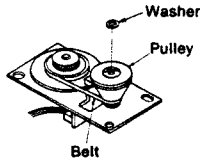

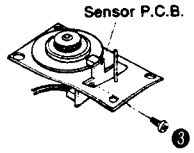

Ref. No. 21	Removal of the optical pickup cover
Procedure 14→21	

1. Remove the 9 screws (❶~❾).

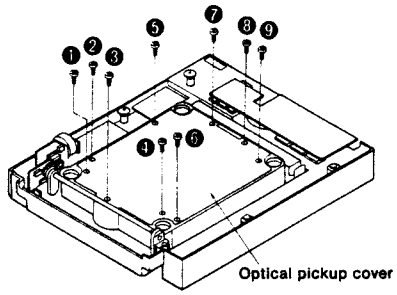

Ref. No. 22	Removal of the traverse P.C.B.
Procedure 14→21→22	

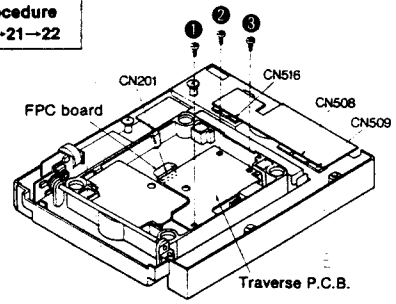

1. Remove the 3 screws (❶~❸).
2. Remove the 3 connectors (CN508, CN509, CN516).
3. Remove the FPC board (CN201).

Caution:

To prevent the breakdown of the laser diode, antistatic shorting pin is inserted into the FPC board.

Ref. No. 23	Removal of the spindle motor P.C.B.
Procedure 14→21→23	

1. Remove the 3 screws (❶~❸).
2. Remove the 1 connector (CN507).

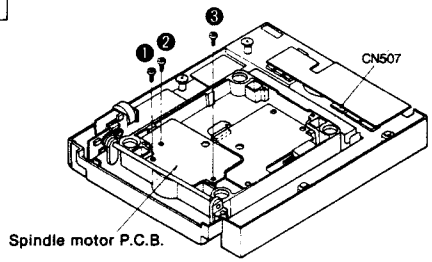

Ref. No. 24	Removal of the optical pickup
Procedure 14→21→23→24	

1. Remove the 2 screws (❶, ❷).
2. Remove the guide shaft holders.
3. Unsolder the 2 terminals and the 2 screws (❸, ❹).

Cautions:

- Refer to the handling precautions for optical pickup and instructions for traverse oil (See page 8).
- Take care not to touch the brush terminal.

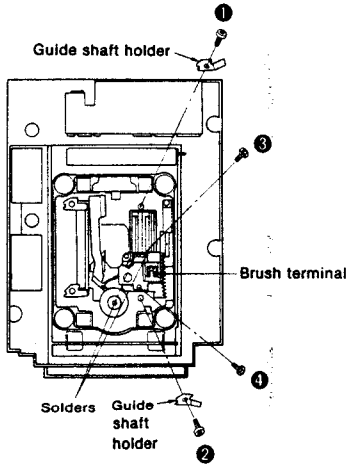

Ref. No. 25	How to check the digital P.C.B.
Procedure 1→2→25	

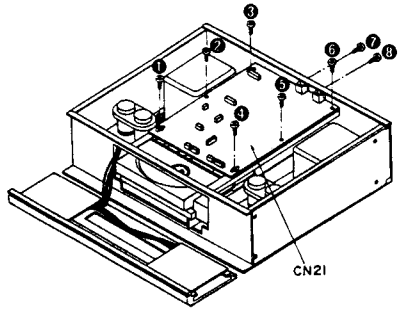

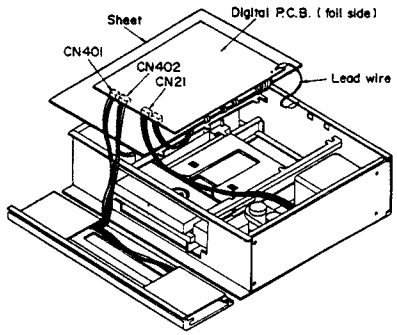

1. Remove the 8 screws (❶~❽).
2. Remove the front panel (See page 9).
3. Pull the front panel down at a 90 degree angle as shown in the figure above.
4. Remove CN21, CN401 and CN402 and turn over the P.C.B.
5. Attach CN21.
6. Pull the lead wires of CN401 and CN402 out of the unit and have them loosen enough.
7. Attach CN401 and CN402.
8. When checking the soldered surface and replacing the parts, do as shown.
9. Be sure to re-arrange the lead wires of CN401 and CN402 properly after finishing check.

Note:

Connect the main P.C.B. ground terminal to the chassis with a lead wire.

■ BEFORE REPAIR

This unit contains no audio circuitry (D/A converter, digital filter). Servicing or checking the unit requires a digital processor or amplifier equipped with an optical CD jack (e.g. SH-X1000, SU-MA10, SU-V90D, SU-V100D).

MEASUREMENTS AND ADJUSTMENTS

Warning: This product uses a laser diode. Refer to caution statements on page 2.

ACHTUNG:
- Die lasereinheit nicht zerlegen.
- Die lasereinheit darf nur gegen eine vom hersteller spezifizierte einheit ausgetauscht werden.

Caution: During adjustment, never connect CH-2 probe's GND to any place for it may short Vref line. (Connect CH-1 probe's GND to specified TP. described in each section.)

• Adjustment points (Digital P.C.B.)

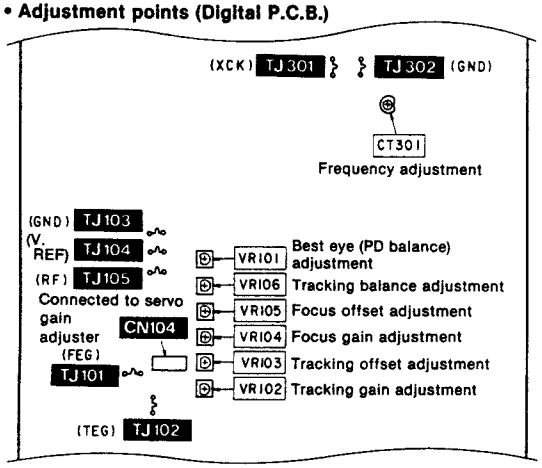

• Connection of oscilloscope

(For best eye, focus offset, tracking offset, tracking balance, turntable height and mechanical adjustments.)

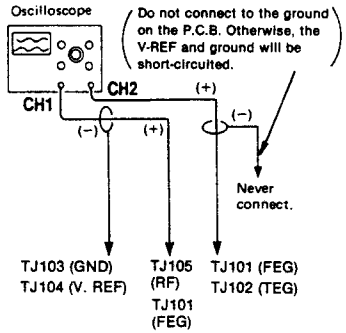

• Connection of servo gain adjuster

(For tracking gain, focus gain and tracking balance adjustments.)

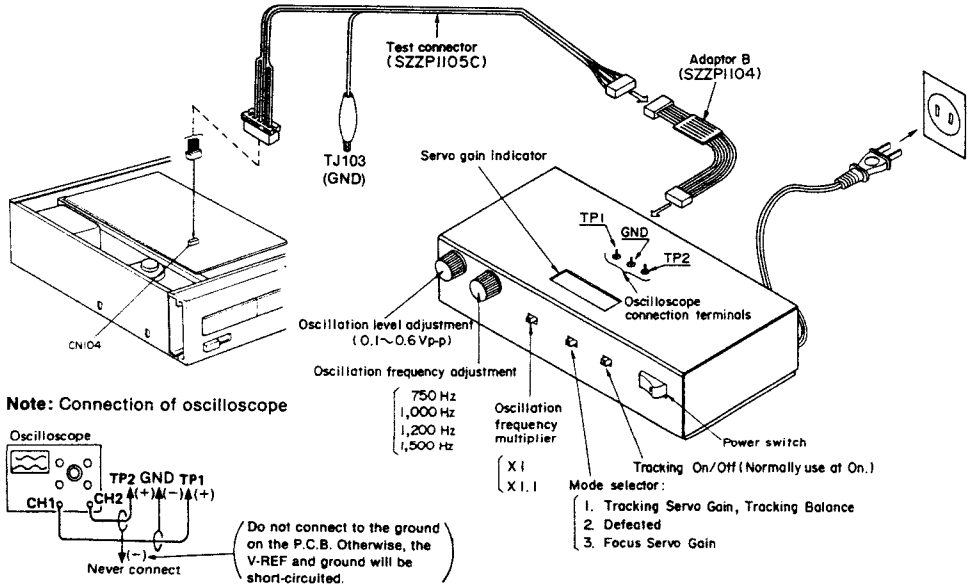

Note: Connection of oscilloscope

Measuring Instruments and Special Tools

- ∗ Servo gain adjuster (SZZP1094C–1)
  - • Test connector (SZZP1105C)
  - • Adaptor B (SZZP1104)
- ∗ Test discs
- 1. Playability test disc (SZZP1054C)
- 2. Uneven test disc (SZZP1056C)
- 3. Black band test disc (SZZP1057C)
- ∗ Normal disc
- ∗ Dual-beam oscilloscope with bandwidth of 30 MHz or better (with EXT trigger and 1 : 1 probe).
- ∗ Audio frequency (AF) osillator
- ∗ Conversion connector (SZZP1032F)
- ∗ Allen wrench (M2.0) (SZZP1101C)
- ∗ Allen wrench (M1.27 or M1.25)
- ∗ 0.9mm clearance gauge (RZZ0297)
- ∗ Filter
- ∗ Frequency counter

Perform adjustments depend on the part to be replaced according to followings:

(1) Spindle motor ..... Items (1), (3) to (8)
(2) Turntable ..... Items (1), (3), to (8)
(3) Optical pickup ..... Items (2) to (8)

• Temporary setting of each VR

Temporary VR setting if any of the trimmer VRs are replaced or require readjustment, temporarily set them to the following positions:

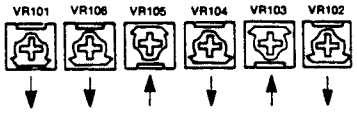

Adjusting Procedure

∗ If you have replaced the optical pickup, spindle motor, or turntable, do the following adjustment:

(1) TURNTABLE HEIGHT ADJUSTMENT

1. Insert the 0.9 mm clearance gauge (RZZ0297) between the turntable and the loading base (see the figure at right).
2. Tighten the turntable retention screw with the 1.27 mm allen wrench.
3. Connect the oscilloscope's CH. 1 probe across TJ101 (FEG) (+) and TJ104 (V. REF) (−) terminal via a filter.
   (Note: A voltage of 2.5V appears at the V. REF terminal. Take care not to short the player's chassis to the oscilloscope ground.)
   Oscilloscope setting: VOLT ..... 50 mV
   SWEEP ..... 1 ms.
   Input coupling ... DC
4. Adjust oscilloscope's DC zero balance.
5. Switch the player power **ON**, and play the test disc (SZZP1054C).
6. Measure the voltage amplitude of the signal on the oscilloscope.

Note 1. If the measured amplitude is within a range of +/− 15 mV, the turntable height is correct. If it is outside this range, adjust the turntable height by using the clearance gauge as a pry.
If the amplitude exceeds +15 mV, lower turntable.
If the amplitude is below −15 mV, elevate the turntable.

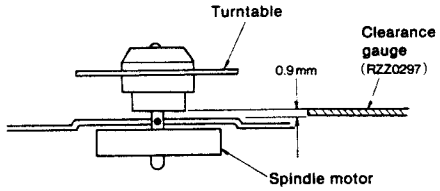

Note 2. If the measured amplitude greatly surpasses or falls short of the range above, set **VR105** at or around the center, then try to adjust the height again. (Then be sure to adjust the focus offset as well.)

• Filter for turntable height adjustment
Resistor: ERDS2TJ103 (10kΩ)
Capacitor: ECQV1H104KV (0.1μF)

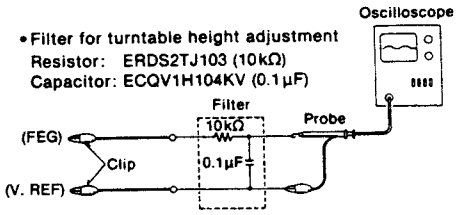

(2) MECHANICAL ADJUSTMENT

PREPARATION

① Remove the cabinet (see Ref. No. 1 of the disassembly instructions).
② Remove the digital P.C.B. (see Ref. No. 6 of the same).
③ Remove the side angle (L), (R) (see Ref. No. 10 of the same).
④ Remove the clamp chassis and magnet (see Ref. No. 12, 13 of the same).
⑤ Remove the loading unit and disc holder (see Ref. No. 14, 15 of the same).
⑥ Set the test disc and magnet on the turntable.

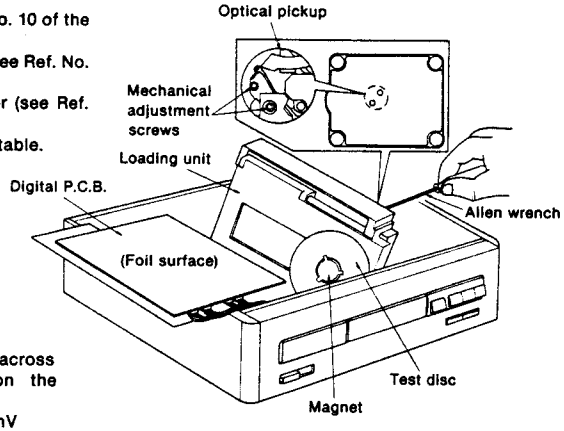

1. Connect the oscilloscope's CH. 1 probe across TJ105 (RF) (+) and TJ103 (GND) (−) on the digital P.C.B.
   Oscilloscope setting: VOLT 100mV
   SWEEP .....0.5μs.
   Input coupling.....AC
2. Switch the player power **ON**, and play track **9** on the test disc (SZZP1056C). (Playing any other track may yield a false adjustment.)
3. Leave the player in Play mode, and place it as shown in the figure on the right.
4. Alternately adjust the two mechanical adjusting screws with the 2.0mm allen wrench (SZZP1101C) until the vertical fluctuation of RF signal is minimized and the eye pattern is most stretched.
5. After completing the adjustment, lock the **mechanical adjustment screws** with lock paint (RZZOL01).

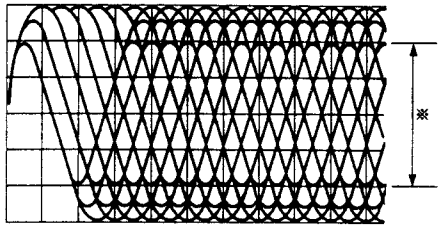

※ Most stretched eye pattern.

(3) BEST EYE (PD BALANCE) ADJUSTMENT

1. Connect the oscilloscope's CH. 1 probe across TJ105 (RF) (+) and TJ103 (GND) (−) on the digital P.C.B.
   Oscilloscope setting: VOLT 100mV
   SWEEP .....0.5μs.
   Input coupling.....AC
2. Switch the player power **ON**, and play the 1kHz (track 1) on the test disc (SZZP1054C).
3. Adjust **VR101** until the vertical fluctuation of RF signal is minimized and the eye pattern is most stretched.

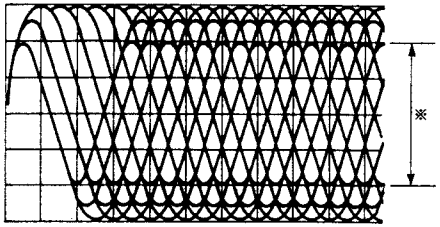

※ Most stretched eye pattern.

(4) FOCUS GAIN ADJUSTMENT

1. Set the "FREQUENCY" dial of the servo gain adjuster's to "750" the "RANGE" selector to "×1" and the "OSC LEVEL" control to "0.3" (750Hz, 300mVp-p).
2. Set the "MODE SELECTOR" to position "2," and the "TRACKING ON/OFF" switch to "ON."
3. Play track 1 (1kHz) on the test disc (SZZP1054C).
4. Change the "MODE SELECTOR" switch setting from position "2" to "3."
5. Adjust **VR104** until the green "SERVO GAIN" indicator LED comes on to indicate "GOOD."
6. Set the "MODE SELECTOR" switch from position "3" back to "2."
   Note: With the new version of the servo gain adjuster, connect TP1, TP2, and TP3 to an oscilloscope, and you will be able to perform all adjustments while monitoring the waveforms on the oscilloscope screen. Adjust **VR104** until the signal amplitude on one channel becomes identical to that on the other, as shown at right. This adjustment procedure also applies to the former version of the servo gain adjuster.
   Oscilloscope setting: VOLT.....100mV (both channels)
   SWEEP .....1ms.
   Input coupling.....AC

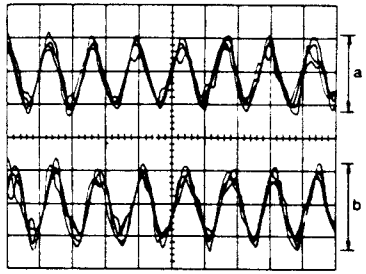

※ Adjust **VR104** until a equals b.

(5) TRACKING GAIN ADJUSTMENT

1. Set the "FREQUENCY" dial of the servo gain adjuster's to "1,000" the "RANGE" selector to "×1" and the "OSC LEVEL" control to "0.3" (1kHz, 300mVp-p).
2. Play track 1 (1kHz) on the test disc (SZZP1054C).
3. Set the "MODE SELECTOR" switch from position "2" to "1."
4. Adjust **VR102** until the green "SERVO GAIN" indicator LED comes on to indicate "GOOD."
5. Set the "MODE SELECTOR" switch from position "1" back to "2."
   Note: When using an oscilloscope for this adjustment, follow the procedure given in the "Note" in (4), "Adjusting Focus Gain" above.

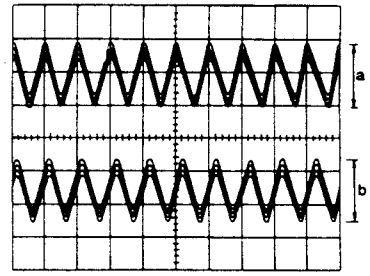

※ Adjust **VR102** until a equals b.

(6) FOCUS OFFSET ADJUSTMENT

Note: Set the "MODE SELECTOR" switch of the Servo Gain Adjuster to position "2."

1. Connect the oscilloscope's CH. 1 probe across TJ105 (RF) (+) and TJ103 (GND) (−) on the digital P.C.B. and its CH. 2 probe (+) to TJ101 (FEG) (+).
   Oscilloscope setting: VOLT.....200mV (CH. 1)
   100 mV (CH. 2)
   SWEEP.....0.2 ms.
   Input coupling...AC (both CH. 1 and 2)
   Trigger mode ....NORM (trigger CH. 1.)
2. Switch the player power **ON**, and play track **9** on the test disc (SZZP1057C).
3. Trigger the oscilloscope's CH. 1 so that the following waveforms are observed. Adjust **VR105** until the dip in the RF signal envelope on CH. 1 is smooth and the signal amplitude on CH. 2 is minimized, i.e. when amplitude A equals amplitude B.

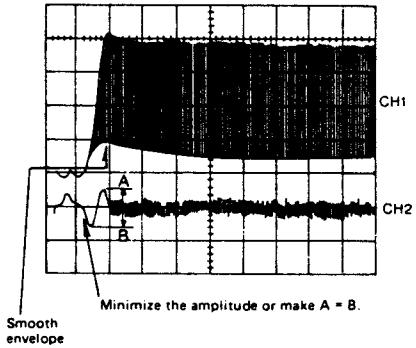

(7) TRACKING OFFSET ADJUSTMENT

Note: Set the "**MODE SELECTOR**" switch of the Servo Gain Adjuster to position "**2.**"

1. Connect the oscilloscope's CH. 1 probe across TJ105 (RF) (+) and TJ103 (GND) (−) on the digital P.C.B., and its CH. 2 probe (+) to TJ102 (TEG) (+).
   Oscilloscope setting: VOLT.....200mV (CH. 1)
   100mV (CH. 2)
   SWEEP.....0.2 ms.
   Input coupling..AC (both CH. 1 and 2)
   Trigger mode...NORM (trigger CH. 1.)
2. Switch the player power **ON**, and play track **9** on the test disc (SZZP1057C).
3. Trigger the oscilloscope's CH. 1 so that the following waveforms are observed. Adjust **VR103** until the dip in the RF signal envelope on CH. 1 is smooth and the signal amplitude on CH. 2 is minimized, i.e. when amplitude A equals amplitude B.

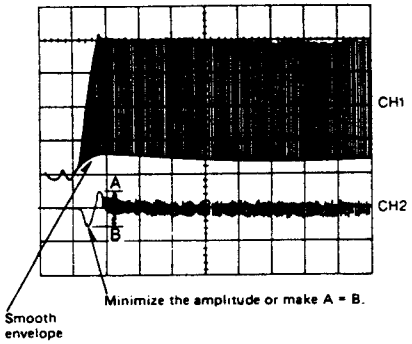

(8) TRACKING BALANCE ADJUSTMENT

1. Set the "FREQUENCY" dial of the servo gain adjuster's to "**1,000**" the "RANGE" selector to "×1" and the "OSC LEVEL" control to "**0.6**" (**1kHz, 600mVp-p**).
2. Connect the hot lead of the oscilloscope's CH. 1 probe to TJ105 (RF) and the cold lead to TJ103 (GND).

∗ Connect the hot lead of the oscilloscope's CH. 2 probe to **TP1** on the servo gain adjuster.
Oscilloscope setting: VOLT.....100mV (CH. 1)
200mV (CH. 2)
SWEEP.....0.1ms.
Input coupling.....AC (both CH. 1 and CH. 2)
Trigger mode.....NORM (trigger CH. 2)

3. Play track **1** (**1kHz**) on the test disc (SZZP1054C).
4. Set the "MODE SELECTOR" switch of the servo gain adjuster to position "**1.**"
5. The waveform as shown at right will appear on the oscilloscope. Adjust **VR106** until the envelope amplitude indicated by the asterisk is minimized uniformly.

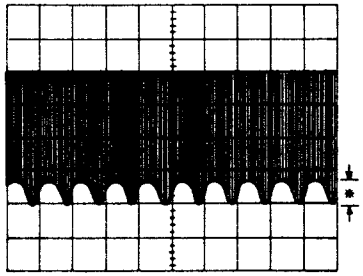

※ Minimize the envelope amplitude uniformly.

(9) FREQUENCY ADJUSTMENT

1. Connect the frequency counter to TJ302 (GND), TJ301 (XCK).
2. Adjust **CT301** for **16.9344MHz±10Hz** on frequency counter reading.

(10) CHECK OF PLAY OPERATION AFTER ADJUSTMENT

- **Checking Skip Search**

1. Play an ordinary musical program disc.
2. Press the skip button to check for normal skip search operation (in both the forward and reverse directions).

- **Checking Manual Search**

1. Play an ordinary musical program disc.
2. Press the manual search button to check for smooth manual search operations at either low or high speed (in both the forward and reverse directions).

∗ **Checking Using Defect Disc**

1. Play the 0.7 mm black dot and the 0.7 mm wedge on the defect test disc (SZZP1054C) and verify that no sound skip or noise occurs.
2. Play the middle tracks of the uneven test disc and verify that no sound skip or noise occurs.

■ TERMINAL FUNCTION OF IC'S

• IC101 (AN8373S): Servo amp.

Pin No.	Mark	I/O Division	Function
1	AMP1	I	RF signal input (X30 amp.) (Not used, connected to GND)
2	PDAD	I	Photo detector current input (A2) (Not used, open)
3	PDA	I	Photo detector current input (A1)
4	PDBD	I	Photo detector current input (A4) (Not used, open)
5	PDB	I	Photo detector current input (A3)
6	LPD	I	Non-inverting laser power input
7	LD	O	Laser power auto control output
8	FBL1	I	PD balance adjustment
9	FBL2	I	
10	TBL1	I	Tracking balance adjustment
11	TBL2	I	
12	FOOFS	I	Focus offset adjustment
13	IVA	O	Current/voltage conversion output (A)
14	IVB	O	Current/voltage conversion output (B)
15	FE	O	Focus gain adjustment output
16	FPI	I	Focus error signal input
17	TP1	I	Tracking error signal input
18	C. CPL	I	Tracking error filter capacitor input
19	C. TPH		
20	C. FPL	I	Focus error filter capacitor input
21	C. FPH		
22	TPO	O	Tracking error signal output

Pin No.	Mark	I/O Division	Function
23	FPO	O	Focus error signal output
24	FGC	I	Focus gain up signal input (Not used, connected to GND)
25	TGC	I	Tracking gain up signal input (Not used, connected to GND)
26	GD	I	Focus/tracking gain down signal input (Not used, connected to GND)
27	PTO	O	Position detecting amp. output
28	PTI	I	Position detecting amp. input
29	PBO	O	Position detecting buffer output
30	POT	I	Position detecting buffer input
31	BDO	O	Dropout detection output
32	$\overline{\text{RFDET}}$	O	RF detection signal output
33	SDO	O	Dropout detection pulse output
34	C. SBDO	I	Dropout detecting capacitor input
35	ARF	O	RF signal output
36	C. AGC	I	AGC detecting capacitor input
37	VCC	I	Power supply
38	LDON	I	Laser power control input
39	RF IN	I	RF signal input
40	AMPO	O	RF signal output (Not used, open)
41	VREF	O	Reference voltage output
42	GND	—	Ground terminal

• IC102 (AN8374S): Servo processor

Pin No.	Mark	I/O Division	Function
1	LSA	I	Phase difference input (A)
2	LSB	I	Phase difference input (B)
3	TEOFS	I	Tracking offset adjustment
4	TE	O	Tracking gain adjustment
5	TEG	I	
6	TE OUT	O	Tracking error signal output
7	TE BPF	I	Tracking error gain detecting filter (Not used, open)
8	FEG	I	Focus gain adjustment
9	FE OUT	O	Focus error signal output
10	CLW	O	Triangular wave oscillator capacitor input
11	VREF	I	Reference voltage input
12	ARF	I	RF signal input
13	CDSL	I	Data slice filter capacitor input
14	FPC	I	Frequency difference signal input
15	GND	I	Ground terminal
16	C. PLL	I	PLL loop filter constant
17	VSS	I	Ground terminal
18	CLK	I	Frequency pull-in clock signal (88.2kHz) input
19	SRF	O	Sliced and digitized RF signal output
20	PCK	O	Clock output extracted from SRF
21	EFM	O	EFM signal output synchronous with PCK
22	VDD	I	Power supply terminal

Pin No.	Mark	I/O Division	Function
23	SPCNT	O	Track crossing speed control output (Not used, open)
24	SENSE	O	Selector output (track crossing state)
25	TRV	O	Traverse servo control output
26	$\overline{\text{FLOCK}}$	O	Focus lock signal output
27	KICK	O	Track kick signal output
28	LDON	O	Laser power control output
29	VDET	O	Focus/tracking gain up output (Not used, open)
30	CNT1	I	Control input (FOON: Focus servo ON signal)
31	CNT2	I	Control input (TRON: Tracking servo ON signal)
32	CNT3	I	Control input (KICKF: Kick direction (forward) command)
33	CNT4	I	Control input (KICKR: Kick direction (reverse) command)
34	TRVF	I	Traverse forward command signal
35	TRVR	I	Traverse backward command signal
36	$\overline{\text{RFDET}}$	I	RF detection signal input
37	BDO	I	Dropout detection input
38	VCC	I	Power supply terminal
39	TVPO	O	Traverse position detecting resistor/capacitor inputs
40	TVPI	I	
41	BROUT	O	Tracking drive control output
42	BRIN	I	Tracking error signal input

• IC103 (AN8377N): BTL drive

Pin No.	Mark	I/O Division	Function
1	PVCC	I	Driver power supply terminal
2	VCC	I	Power supply terminal
3	TB	O	External transistor base driving output
4	VMON	O	Voltage output (Not used, open)
5	TVDI	I	Traverse error signal input
6	FDI	I	Focus error signal input
7	TDI	I	Tracking error signal input
8	VREF	I	Reference voltage input
9	TD−	O	Inverting output of tracking driver

Pin No.	Mark	I/O Division	Function
10	TD+	O	Non-inverting output of tracking driver
11	FD−	O	Inverting output of focus driver
12	FD+	O	Non-inverting output of focus driver
13	TVD−	O	Inverting output of traverse driver
14	TVD+	O	Non-inverting output of traverse driver
15	$\overline{\text{RESET}}$	O	Reset signal output (Not used, open)
16	PC	I	PC Input (connect to GND)

• IC301 (MN6622): Digital signal processor

Pin No.	Mark	I/O Division	Function
1	MEMP	I	Emphasis signal input
2	PC	O	Spindle motor "ON" signal (ON at "L")
3	EC	O	Spindle motor drive signal
4	FG	I	Not used, open
5	TTF	I	Spindle motor free run (Not used, connected to GND)
6	FLAG0	O	Not used, open
7	IPFLAG	O	Not used, open
8	FLAG6	O	Not used, open
9	PCK	I	PLL extract clock input (4.2336MHz)
10	VDD	I	Power supply terminal
11	EFM	I	EFM signal input (PLL)
12	SRF	I	EFM signal input (DSL)
13	DO	I	Drop-out signal ("H" at drop-out)
14	CLVS	O	Not used, open
15	FPC	O	PLL frequency comparison signal
16	BSSEL	O	Not connected
17	$\overline{\text{RIN}}$	I	Remote control signal input (Not used, connected to power supply)
18	FSL	I	Not used (connected to GND)
19	SLEEP	I	Not used (connected to GND)
20	SUBC	O	Sub code series output
21	SBCK	I	Sub code shift clock input
22	BLKCK	O	Sub-code block (Q-data) clock (75Hz)
23	$\overline{\text{CLDCK}}$	O	Sub-code frame (Q-data) clock (7.35kHz)
24	$\overline{\text{SUBQ}}$	O	Sub-code (Q-data) output
25	CRC	O	Not used, open
26	$\overline{\text{RST.}}$	I	Reset signal input ("L"=Reset)
27	MLD	I	Data input (command load)
28	MCLK	I	Data clock input (command clock)
29	MDATA	I	Data input (command data)
30	DMUTE	I	Muting control input
31	$\overline{\text{TRON}}$	I	Tracking servo "ON" signal (ON at "L")
32	STAT	O	Processing condition (CRC, OTC, CLVOK, TT, STOP) output

Pin No.	Mark	I/O Division	Function
33	TX	O	Digital output signal (Not used, open)
34	$\overline{\text{TSTR}}$	I	Not used, connected to power supply
35	$\overline{\text{TEST}}$	I	Not used, connected to power supply
36	VSS	I	GND terminal
37	X2	O	Clock output (16.9344MHz)
38	X1	I	Clock input (16.9344MHz)
39	SEL	I	Not used, connected to GND
40	LDG/ WDCKS	O	Lch deglitch signal/word clock for serial DAC
41	RDG	O	Not used, open
42	DEMPH	O	Not used, open
43	SMCK	O	Clock output (4.2336MHz)
44	WS	O	Not used, open
45	SRCK	O	Not used, open
46	XCK	O	Clock output
47	DA15/ SRDATA	O	DA parallel output (MSB)/serial data output (MSB FIRST)
48	DA14/SRDATA	O	Not used, open
49	DA13/SCK	O	DA parallel output/serial data output bit clock
50	DA12/WDCK	O	Not used, open
51	DA11/BYTCK	O	Not used, open
52	VSS	I	GND terminal
53	DA10/R/L	O	DA parallel output/R/L signal (R at "H")
54 ~ 56	DA9 ~ DA7	O	Not used, open
57	DA6	O	Not used (connected to GND)
58 ~ 63	DA5 ~ DA0	O	Not used, open
64 ~ 71	D7 ~ D0	I/O	16K RAM DATA
72	RAMOE	O	16K RAM OE signal
73	RAMWE	O	16K RAM WE signal
74 ~ 84	RAMA0 ~ RAMA10	O	16K RAM address

• IC303 (YM3615): Digital attenuator

Pin No.	Mark	I/O Division	Function
1	VSS	—	GND terminal
2	M0	I	Mode select terminal L: 2 DAC, H: 1 DAC
3	M1	I	Mode select terminal L: floating output, H: fixed
4	BCI	I	Digital signal bit clock
5	WCI	I	Digital signal word clock
6	DLI	I	Data signal input
7	DRI	I	Data signal L: floating operation, on H: floating operation, off
8	VDD	I	Power supply terminal
9	UP	I	Digital volume up clock input
10	DOWN	I	Digital volume down clock input
11	DR0	O	Rch data output at 2 DAC (Not used, open)
12 ~ 15	AD1 ~ AD4	O	Signal output for floating (Not used, open)
16	DL0	O	Lch, Rch Data output

• IC304 (CXD1075P): Digital audio interface

Pin No.	Mark	I/O Division	Function
1	BCK	I	Bit clock input
2	DATA	I	Data signal input
3	LRCK	I	L/R distinction clock
4	VRDTY	I	Validity flag input
5	C10	—	Category code preset input (Not used, connected to GND)
6	CRCF	I	Data cycle signal
7	VSS	—	GND terminal
8	CKSL	I	Reference clock select input (Not used, connected to power supply)
9	LSFT	I	LSB/MSB first select input (Not used, connected to power supply)
10	XILR	I	LRCK select input (Not used, connected to power supply)
11	INVB	—	(Not used, connected to GND)
12	192FS	I	192fs (8.4672MHz) signal output (Not used, open)
13	XTAL	O	Crystal oscillator terminal (Not used, open)
14	EXTAL	I	Clock (16.9344MHz) input
15	TX	O	Transmission data output
16	C9	I	Category code preset input (Not used, connected power supply)
17	TEST	I	Test mode select input (Ordinaly: L)
18	RESET	I	Reset signal input
19	CBSL	I	Serial/parallel select input (Not used, connected to power supply)
20	D7	I	Emphasis information preset input
21	VDD	I	Power supply terminal
22	D6	I	Copy prohibit information preset input
23	D5	I	Internal resistor preset input
24	D4	—	(Not used, connected GND)
25	D3	I	Sub-code block (Q code) clock (75Hz)
26	D2	I	Sub-code frame (Q code) clock (7.35kHz)
27	D1	I	Sub-code series output
28	EXCK	O	Sub-code shift clock output

• IC401 (MN1554PJY): System control

Pin No.	Mark	I/O Division	Function
1	MCLK	O	Data clock output (Command clock signal)
2	MLD	O	Data clock output (Command clock signal)
3	SYNC	O	(Not used, open)
4	SIRQ	I	(Not used, connected to power supply)
5	IRQ	I	Sub-code block (Q code) clock input (75Hz)
6	SBT	I	Sub-code frame (Q code) clock input (7.35kHz)
7	SBO	I	(Not used, open)
8	SBI	I	Sub-code (Q code) input
9	RST	I	Reset signal input
10	RECV	I	Data receipt command signal
11	SEND	I	Data transmission command signal
12	ACK	I	Data discrimination signal
13	CLK	I	Data lock signal
14 ~ 17	D0 ~ D3	I	Key scan signal
18	P40	—	(Not used, open)
19	P41		
20	TRV-R	O	Traverse "Reverse" command signal
21	TRV-F	O	Traverse "Forward" command signal
22	CNT4	O	Optical servo IC control signal (KICK R: Kick direction [reverse] command)
23	CNT3	O	Optical servo IC control signal (KICK F: Kick direction [forward] command)
24	CNT2	O	Optical servo IC control signal (TRON: Tracking servo)
25	VDD	I	Power supply terminal
26	PC0	—	(Not used, open)
27	PC1		
28	CNT1	O	Optical servo IC control signal (FOON: Focus servo)
29	FLOCK	I	Optical servo condition (focus) input
30	SENSE	I	Optical servo condition (track cross) input
31	FG ON	—	(Not used, connected to GND)
32	STAT	I	Processing status input from signal processing LSI
33	SPFG	I	Spindle motor FG signal input
34	LOFG	I	Loading motor FG signal input
35	CLOSE M SW	I	Disc holder "Close" detection
36	OPEN M SW	I	Disc holder "Open" detection
37	CLOSE SW	I	Disc holder "Close" detection
38	OPEN SW	I	Disc holder "Open" detection
39	UP SW	I	Traverse unit up detection
40	DOWN SW	I	Traverse unit down detection
41	PLUNG	O	Traverse clock cancel control
42	CW/CCW	O	Motor drive control signal input
43	UP/DOWN	O	Motor drive control signal output (Up/Down)
44	OPEN/CLOSE	O	Motor drive control signal output (Loading motor)
45 ~ 48	D0 ~ D3	O	Motor drive control signal output
49	UP	O	Digital volume up clock output
50	DOWN	O	Digital volume down clock output
51	PB2	—	(Not used, open)
52	PB3		
53	OSC2	I	Clock input terminal (4.2336MHz)
54	OSC1		
55	XI	I	Optical servo condition input
56	XO	O	(Not used, open)
57	VSS	—	GND terminal
58	MEMP	O	Emphasis signal output
59	COPY	O	Copy prohibit information preset output
60	A/D	O	Internal resistor preset output
61	MUTE2	—	(Not used, open)
62	D. OUT		
63	D MUTE	O	Muting control
64	MDATA	O	Command data output

• IC601 (MB88724BPJX1): FL drive & timing signal generator

Pin No.	Mark	I/O Division	Function
1	C0	O	FL grid signal
2	C1		
3	C2		
4	C3		
5	C4		
6	C5		
7	C6		
8	C7		
9	C8		
10	C9		
11	C10		
12	C11		
13	C12	O	LED drive (POWER)
14	C13	O	LED drive (PLAY)
15	C14	O	LED drive (PAUSE)
16	C15	O	LED drive (OPEN/CLOSE)
17	P00	O	Key scan signal
18	P01		
19	P02	O	Data discrimination signal
20	P03	O	Data lock signal
21	P10	O	Key scan signal
22	P11		
23	P12		
24	P13		
25	P40	I	Remote control signal input
26	P41	I	(Not used, connected to power supply)
27	P42	O	Data receipt command signal (Not used connected to power supply)
28	P43	O	Data transmission command signal(Not used, connected to power supply)
29	P50	I	(Not used, connected to power supply)
30	P51	I	(Not used, connected to power supply)
31	$\overline{RES}$	I	Reset signal input (reset at "L")

Pin No.	Mark	I/O Division	Function
32	VSS	—	GND terminal
33	X	O	Clock terminal (4.2336MHz)
34	EX	I	
35	SE	I	Not used, connected to power supply
36	WD	—	GND terminal
37	XL	O	(Not used, open)
38	EXL	I	(Not used, connected to power supply)
39	P60		
40	P61		
41	P62	I	Key return signal
42	P63		
43	P70		
44	P71		
45	P72		
46	P73		
47	VF	I	FL drive power supply terminal
48	S0	O	FL anode signal
49	S1		
50	S2		
51	S3		
52	S4		
53	S5		
54	S6		
55	S7		
56	S8		
57	S9		
58	S10		
59	S11		
60	S12		
61	S13		
62	S14		
63	S15		
64	VCC	I	Power supply terminal

• IC801 (AN3821K): Spindle motor drive

Pin No.	Mark	I/O Division	Function
1	A3	O	Drive signal output
2	ATC	O	All output current
3	A2	O	Drive signal output
4	GB	I	Generation brake input (Not used, open)
5	H3−	I	Hole element voltage input (inversion)
6	H3+	I	Hole element voltage input (normal)
7	H2−	I	Hole element voltage input (inversion)
8	H2+	I	Hole element voltage input (normal)
9	H1−	I	Hole element voltage input (inversion)
10	H1+	I	Hole element voltage input (normal)
11	E/S	I	Turn direction command input

Pin No.	Mark	I/O Division	Function
12	ER	O	Turn direction output (Not used, open)
13	VCC	I	Power supply terminal
14	VH+	O	Hole element power supply
15	ECR	I	Reference voltage input
16	EC	I	Torque command input
17	RCC	I	Ripple cancel control input (Not used, open)
18	PCV	I	Voltage return phase compensation terminal
19	TL	I	Torque limmit terminal (Not used, open)
20	CS	O	Current detection terminal
21	GND	—	GND terminal
22	PCT	I	Current return phase compensation
23	A1	O	Drive signal output
24	VM	I	Power supply terminal

■ INTERNAL CONNECTION OF FL

• **Grid connection diagram**

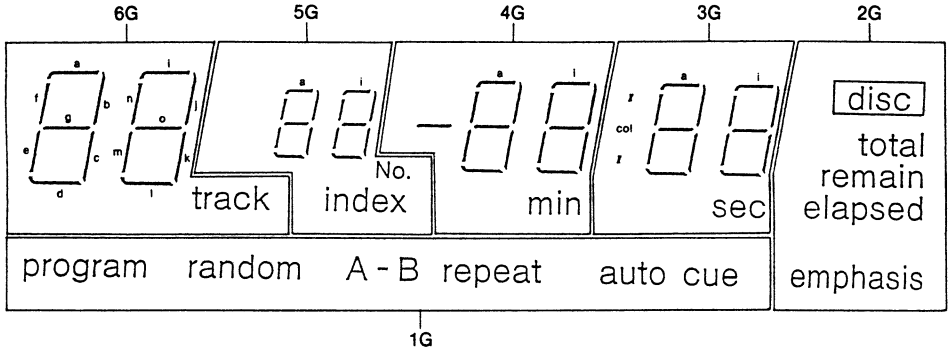

• **Anode connection table**

	6G	5G	4G	3G	2G	1G
S0	a	a	a	a	disc	-
S1	b	b	b	b	emphasis	-
S2	f	f	f	f	-	program
S3	g	g	g	g	-	random
S4	c	c	c	c	elapsed	-
S5	e	e	e	e	remain	A-
S6	d	d	d	d	total	B
S7	-	NO.	—	col	-	repeat
S8	i	i	i	i	-	-
S9	j	j	j	j	-	auto cue
S10	n	n	n	n	-	-
S11	o	o	o	o	-	-
S12	k	k	k	k	-	-
S13	m	m	m	m	-	-
S14	ℓ	ℓ	ℓ	ℓ	-	-
S15	track	index	mim	sec	-	-

• **Pin connection**

Pin No.	38	37	36	35	34	33	32	31	30	29	28	27	26	25	24	23	22	21	20	19	18	17	16	15	14	13	12	11	10	9	8	7	6	5	4	3	2	1
Connection	F2	F2	NP	NP	NP	6G	5G	4G	3G	2G	1G	NP	NP	NP	S15	S14	S13	S12	S11	S10	S9	S8	NP	NP	NP	S7	S6	S5	S4	S3	S2	S1	S0	NP	NP	NP	F1	F1

BLOCK DIAGRAM

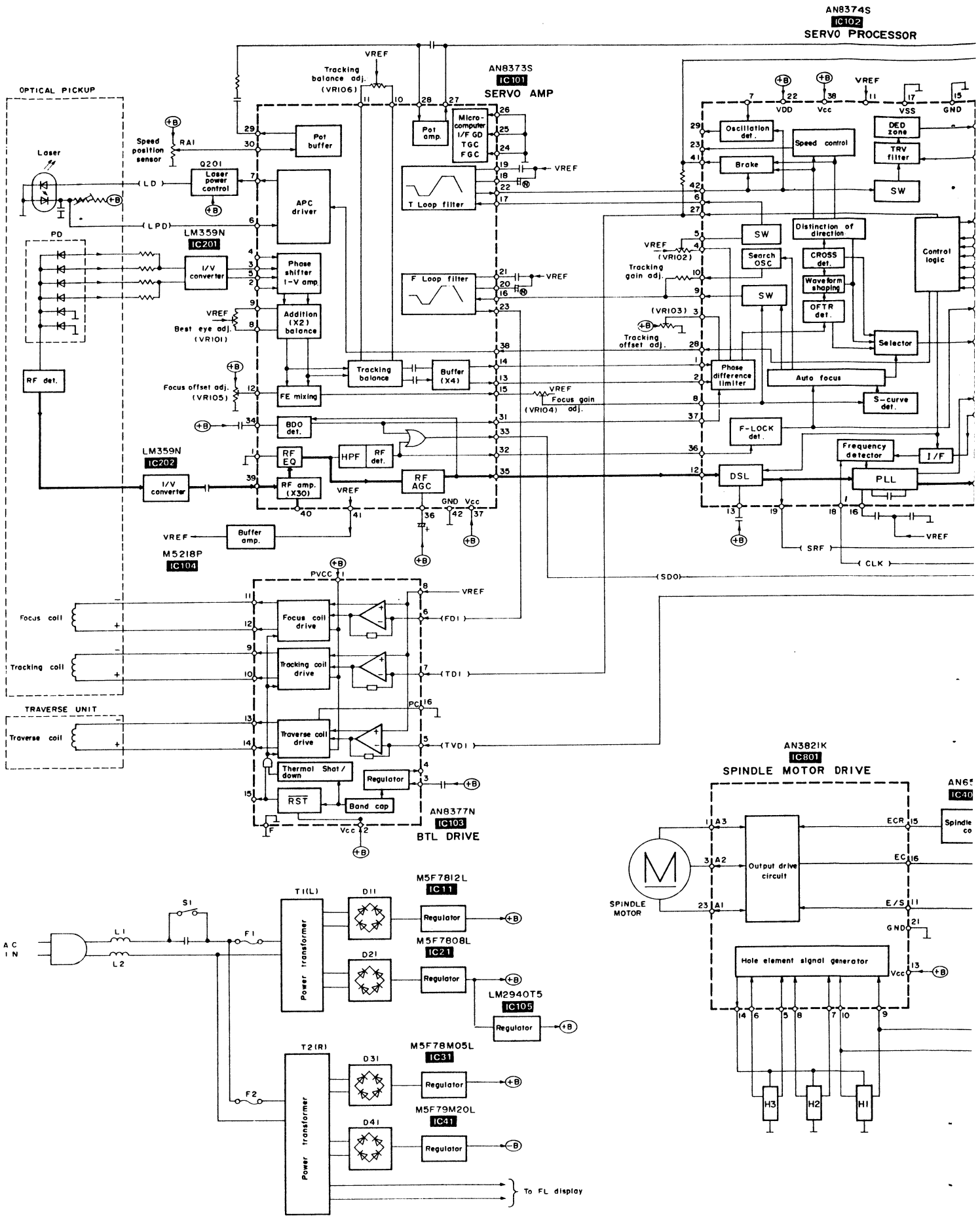

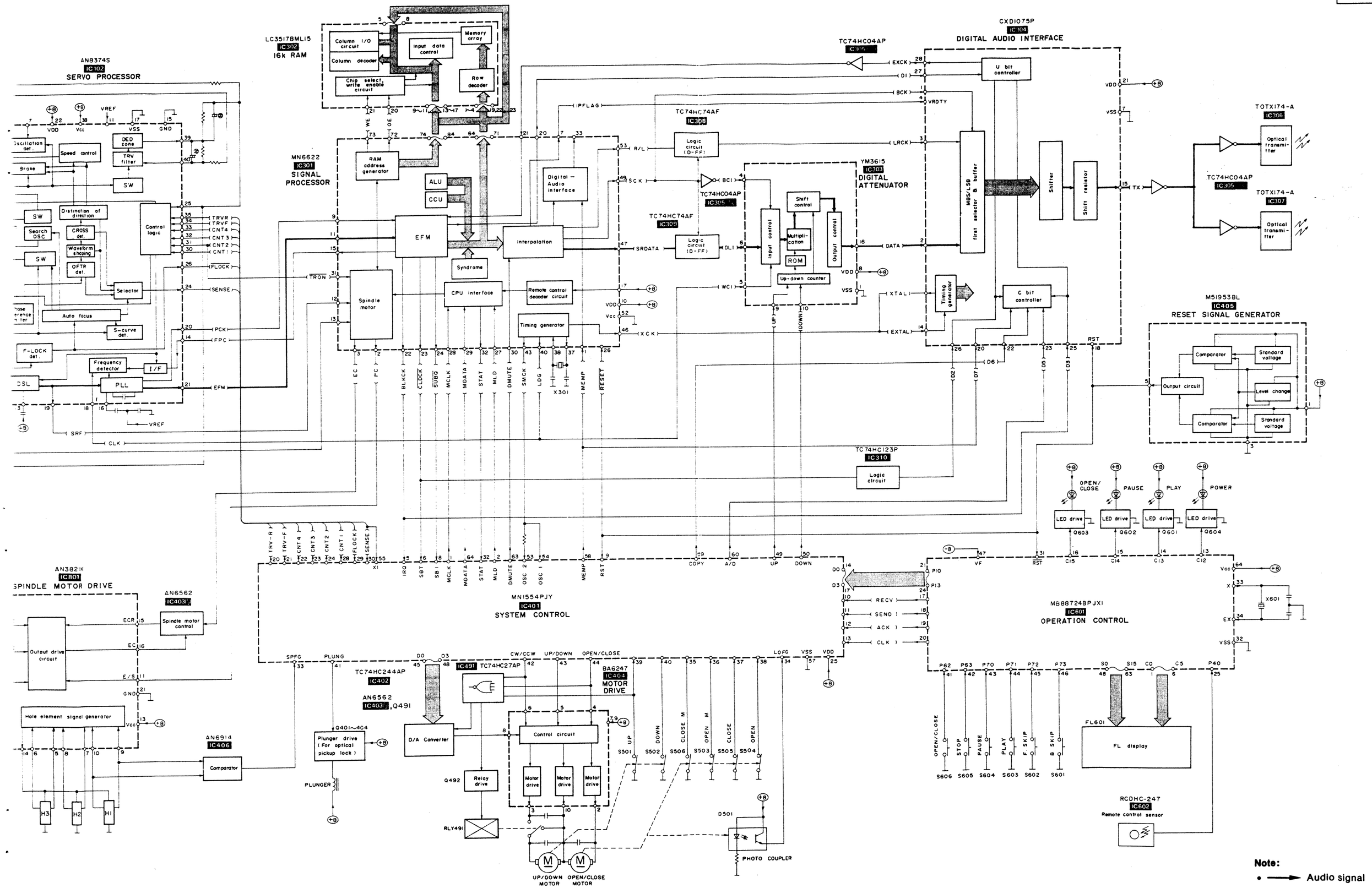
AN8374S
IC102
SERVO PROCESSOR
LC3517BML15
IC302
16k RAM
MN6622
IC301
SIGNAL PROCESSOR
TC74HC04AP
IC305
CXD1075P
IC304
DIGITAL AUDIO INTERFACE
TC74HC74AF
IC308
TC74HC04AP
IC305
TC74HC74AF
IC309
YM3615
IC303
DIGITAL ATTENUATOR
TOTX174-A
IC306
TC74HC04AP
IC305
TOTX174-A
IC307
M51953BL
IC405
RESET SIGNAL GENERATOR
TC74HC123P
IC310
AN3821K
IC801
SPINDLE MOTOR DRIVE
AN6562
IC403
MN1554PJY
IC401
SYSTEM CONTROL
M88872 48PJXI
IC601
OPERATION CONTROL
TC74HC244AP
IC402
AN6562
IC403,Q491
IC491 TC74HC27AP
BA6247
IC404
MOTOR DRIVE
AN6914
IC406
RCDHC-247
IC602
Remote control sensor
Note:
Audio signal

■ SCHEMATIC DIAGRAM (Parts list on pages 46, 47, 54, 55.)

(This schematic diagram may be modified at any time with development of new technology.)

Notes:

- **S1** : Power (power) switch in "**on**" position.
- **S2** : Voltage selector switch "**240V**" position.
- **S501, 502** : Traverse deck up/down detection switches. [S501: UP, S502: DOWN]
- **S601, 602** : Skip switches. [S601: ⏮, S602: ⏭]
- **S603** : Play (play) switch.
- **S604** : Pause (pause) switch.
- **S605** : Stop (stop) switch.
- **S606** : Disc holder open/close (open/close) switch.

- The voltage value and waveforms are the reference voltage of this unit measured by DC electronic voltmeter (high impedance) and oscilloscope on the basis of chassis.
  Accordingly, there may arise some error in voltage values and waveforms depending upon the internal impedance of the tester or the measuring unit.
  ∗The parenthesized are the values of voltage generated during playing (Test disc 1kHz, L+R, 0dB), others are voltage values in stop mode.
- Important safety notice:
  Components identified by ⚠ mark have special characteristics important for safety. When replacing any of these components, use only manufacturer's specified parts.

Part No.	Original Part No.	Supply Part No.
IC403	AN6562	AN1358
IC602	RCDHC-247	RCD0003
D503~506	GP1S53V	SVDGP1S53

- ▬▬▬ / ▬ ▬ ▬ : Positive voltage lines and negative voltage lines.
  ▬▬▬ : audio signal lines.

Caution!
IC and LSI are sensitive to static electricity.
Secondary trouble can be prevented by taking care during repair.
- Cover the parts boxes made of plastics with aluminum foil.
- Ground the soldering iron.
- Put a conductive mat on the work table.
- Do not touch the pins of IC or LSI with fingers directly.

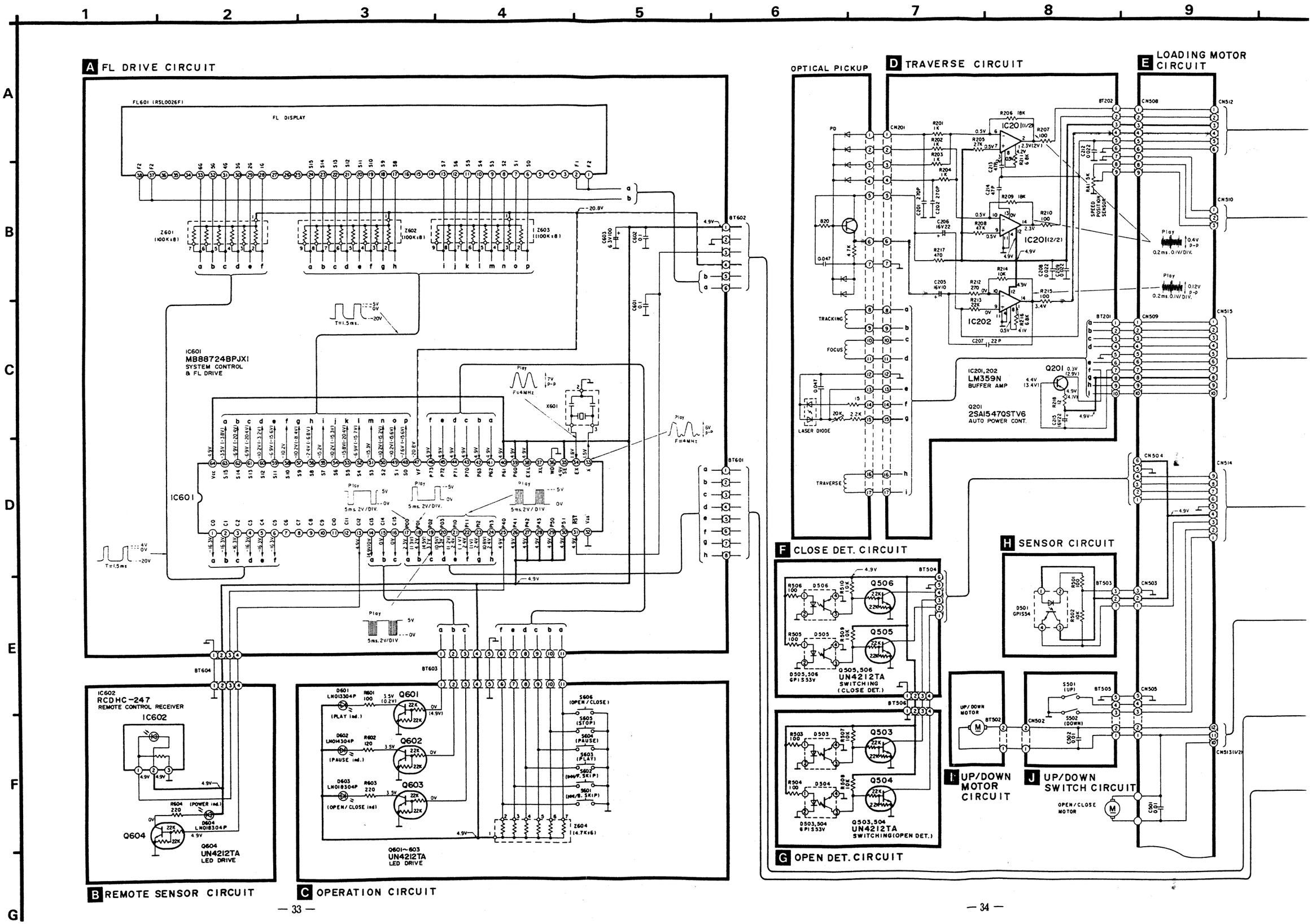
A FL DRIVE CIRCUIT
FL601 (RSL0026F)
FL DISPLAY
IC601
MB88724BPJXI
SYSTEM CONTROL
& FL DRIVE
X601
F=4MHz
B REMOTE SENSOR CIRCUIT
IC602
RCDHC-247
REMOTE CONTROL RECEIVER
Q604
UN4212TA
LED DRIVE
C OPERATION CIRCUIT
Q601~603
UN4212TA
LED DRIVE
OPTICAL PICKUP
D TRAVERSE CIRCUIT
IC201,202
LM359N
BUFFER AMP
Q201
2SA1547QTV6
AUTO POWER CONT.
E LOADING MOTOR CIRCUIT
F CLOSE DET. CIRCUIT
Q505,506
UN4212TA
SWITCHING
(CLOSE DET.)
G OPEN DET. CIRCUIT
Q503,504
UN4212TA
SWITCHING(OPEN DET.)
H SENSOR CIRCUIT
I UP/DOWN MOTOR CIRCUIT
J UP/DOWN SWITCH CIRCUIT

K DIGITAL CIRCUIT

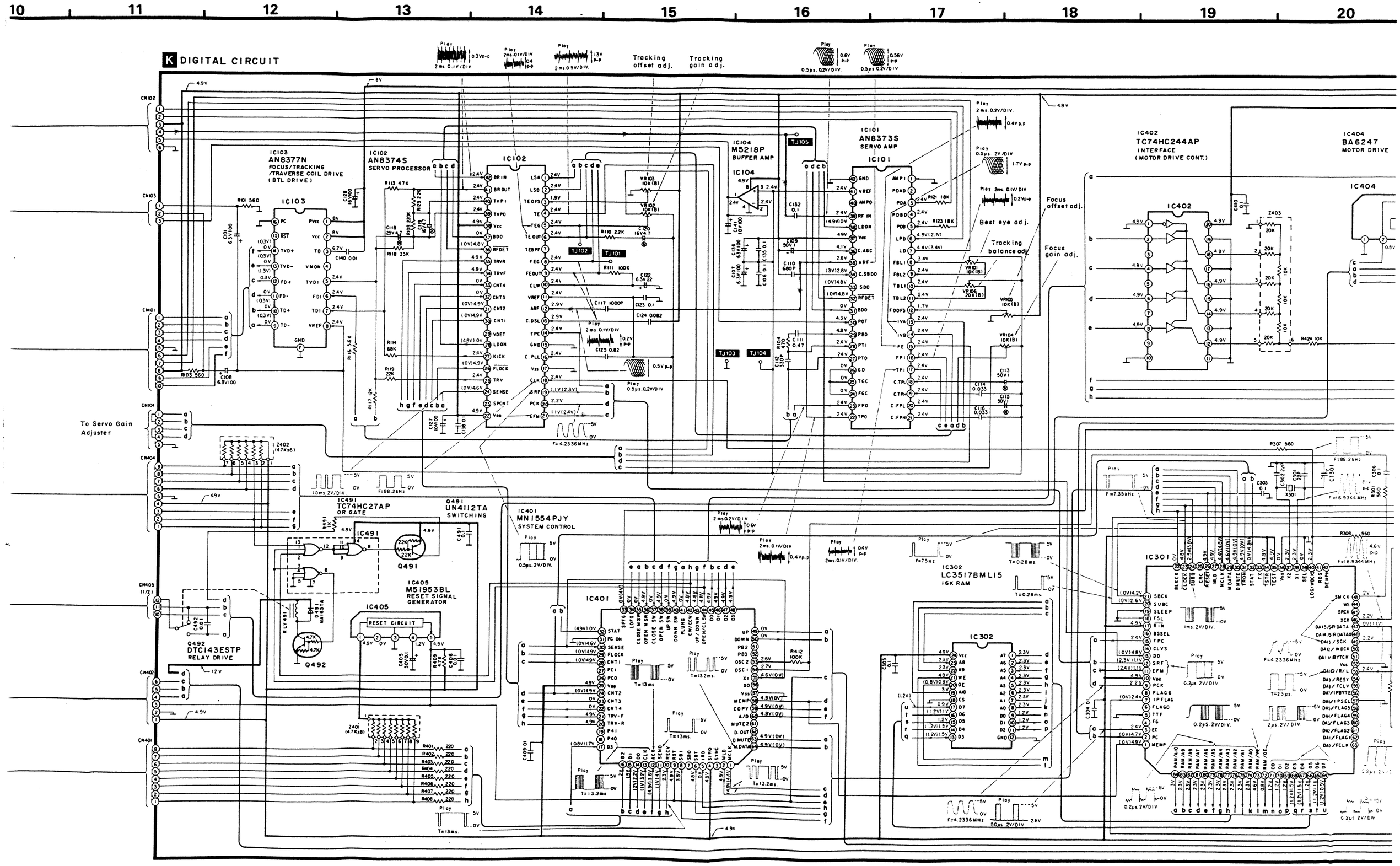

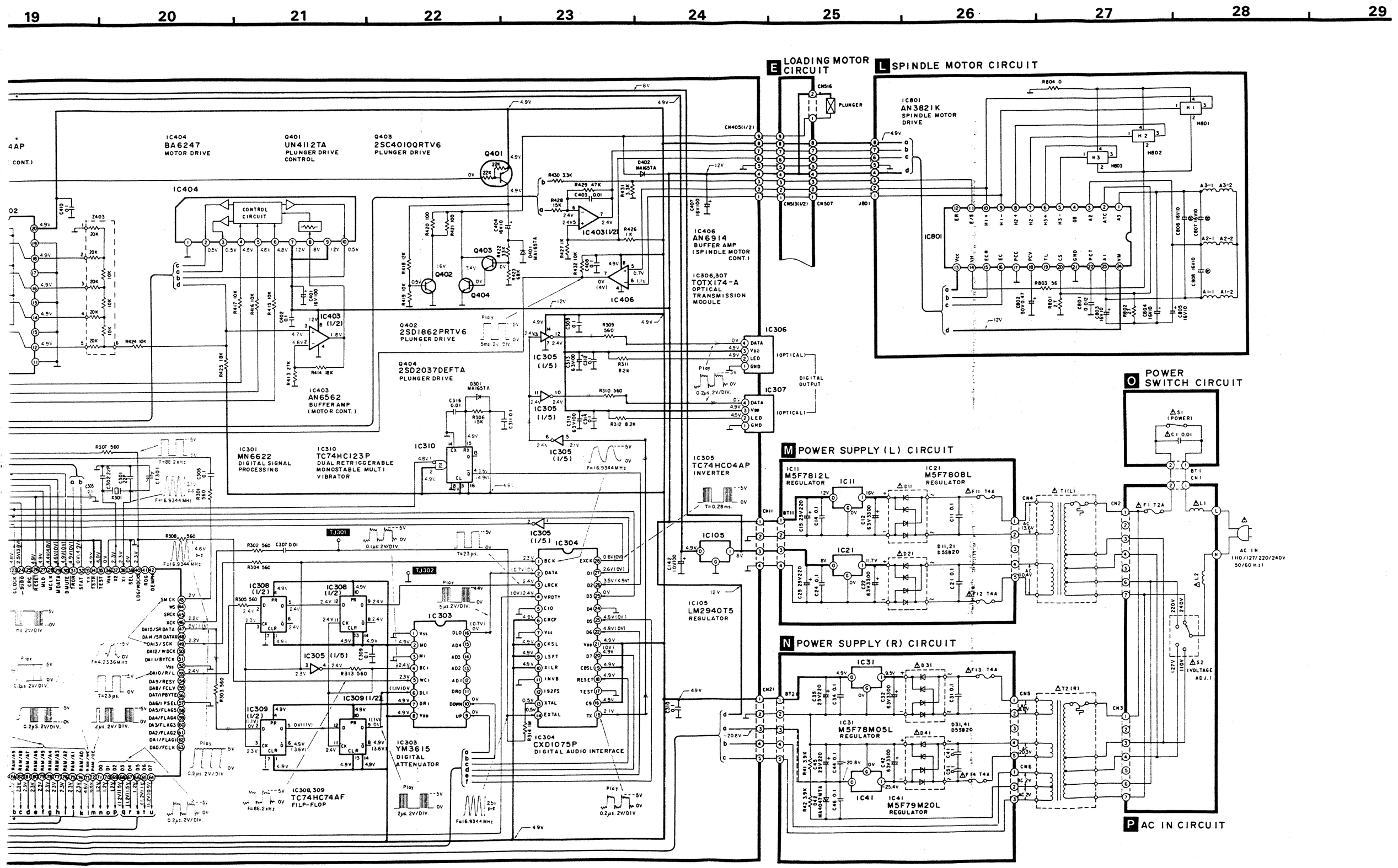
19
20
21
22
23
24
25
26
27
28
29
E LOADING MOTOR CIRCUIT
L SPINDLE MOTOR CIRCUIT
IC404
BA6247
MOTOR DRIVE
Q401
UN4112TA
PLUNGER DRIVE CONTROL
Q403
2SC4010QRTV6
PLUNGER DRIVE
IC403
AN6562
BUFFER AMP (MOTOR CONT.)
Q402
2SD1862PRTV6
PLUNGER DRIVE
Q404
2SD2037DEFTA
PLUNGER DRIVE
IC301
MN6622
DIGITAL SIGNAL PROCESSING
IC310
TC74HC123P
DUAL RETRIGGERABLE MONOSTABLE MULTI VIBRATOR
IC308, 309
TC74HC74AF
FLIP-FLOP
IC303
YM3615
DIGITAL ATTENUATOR
IC304
CXD1075P
DIGITAL AUDIO INTERFACE
IC406
AN6914
BUFFER AMP (SPINDLE MOTOR CONT.)
IC306,307
TOTX174-A
OPTICAL TRANSMISSION MODULE
IC306
IC307
(OPTICAL)
DIGITAL OUTPUT
IC305
TC74HC04AP
INVERTER
IC105
LM2940T5
REGULATOR
IC801
AN3821K
SPINDLE MOTOR DRIVE
PLUNGER
O POWER SWITCH CIRCUIT
M POWER SUPPLY (L) CIRCUIT
IC11
M5F7812L
REGULATOR
IC21
M5F7808L
REGULATOR
N POWER SUPPLY (R) CIRCUIT
IC31
M5F78M05L
REGULATOR
IC41
M5F79M20L
REGULATOR
P AC IN CIRCUIT
AC IN
(110/127/220/240V
50/60 Hz)
S1 (POWER)
S2 (VOLTAGE ADJ.)

PRINTED CIRCUIT BOARDS

A FL DRIVE P.C.B.

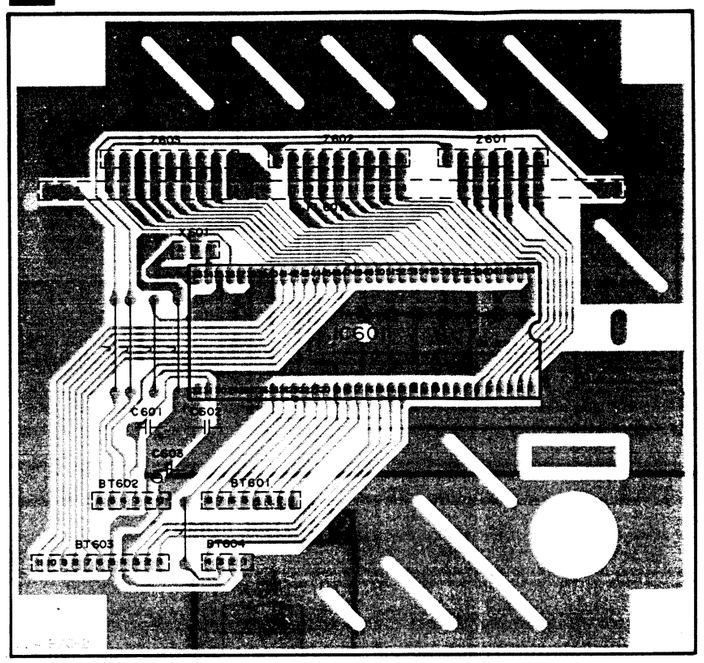

B REMOTE SENSOR P.C.B.

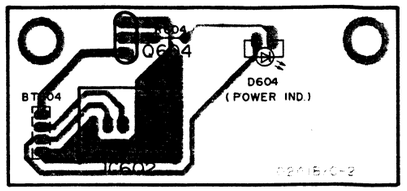

REMOTE SENSOR

F CLOSE DET. P.C.B.

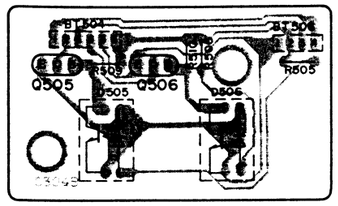

G OPEN DET. P.C.B.

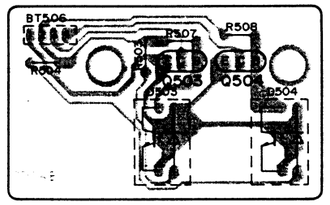

K DIGITAL P.C.B.

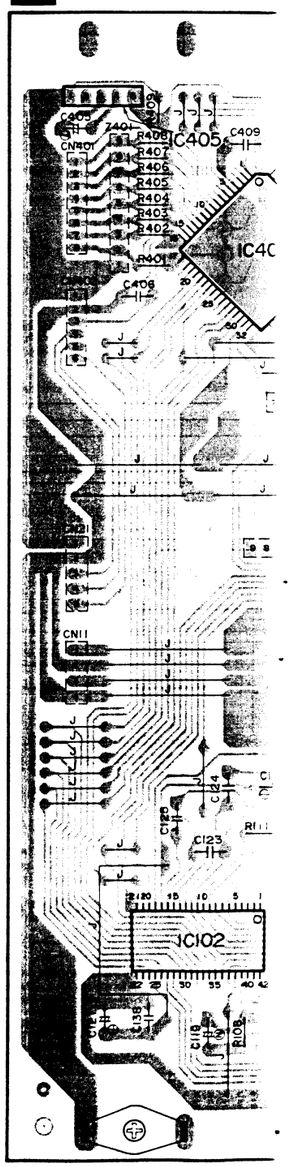

L SPINDLE MOTOR P.C.B.

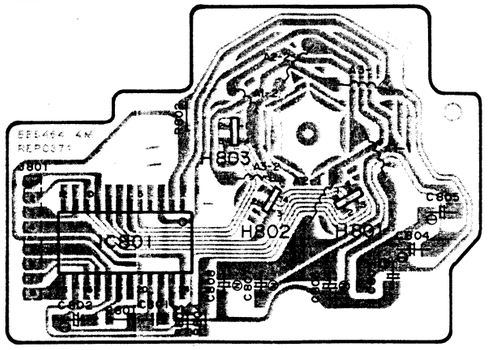

D TRAVERSE P.C.B.

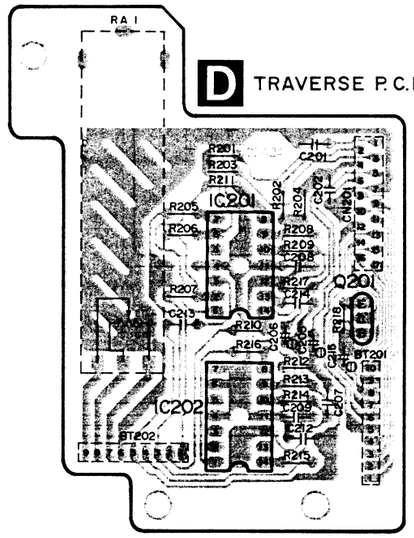

C OPERATION P.C.B.

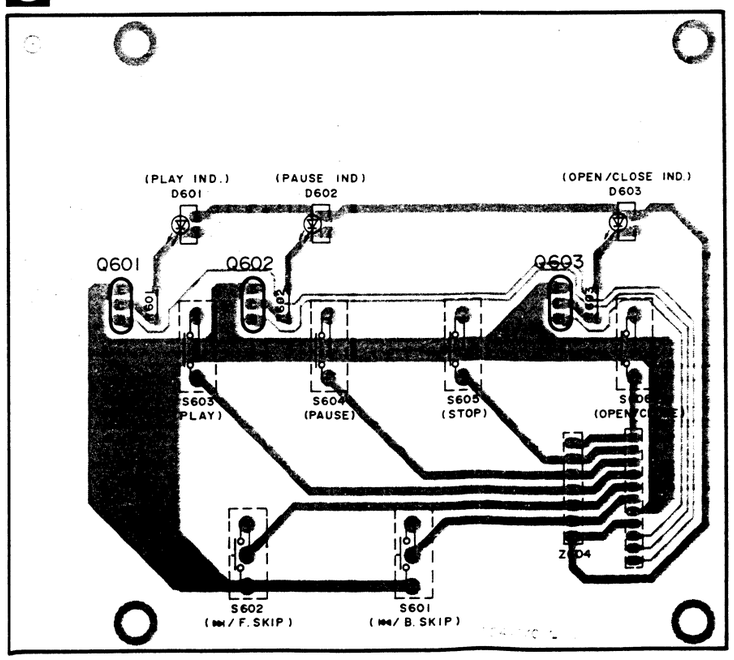

E LOADING MOTOR P.C.B.

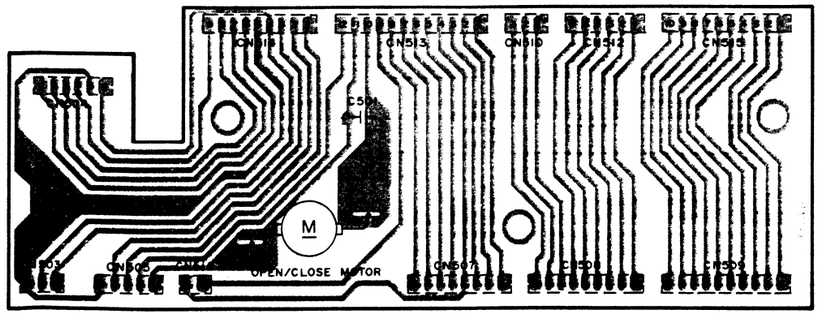

10 11 12 13 14 15 16 17 18 19

K DIGITAL P.C.B.

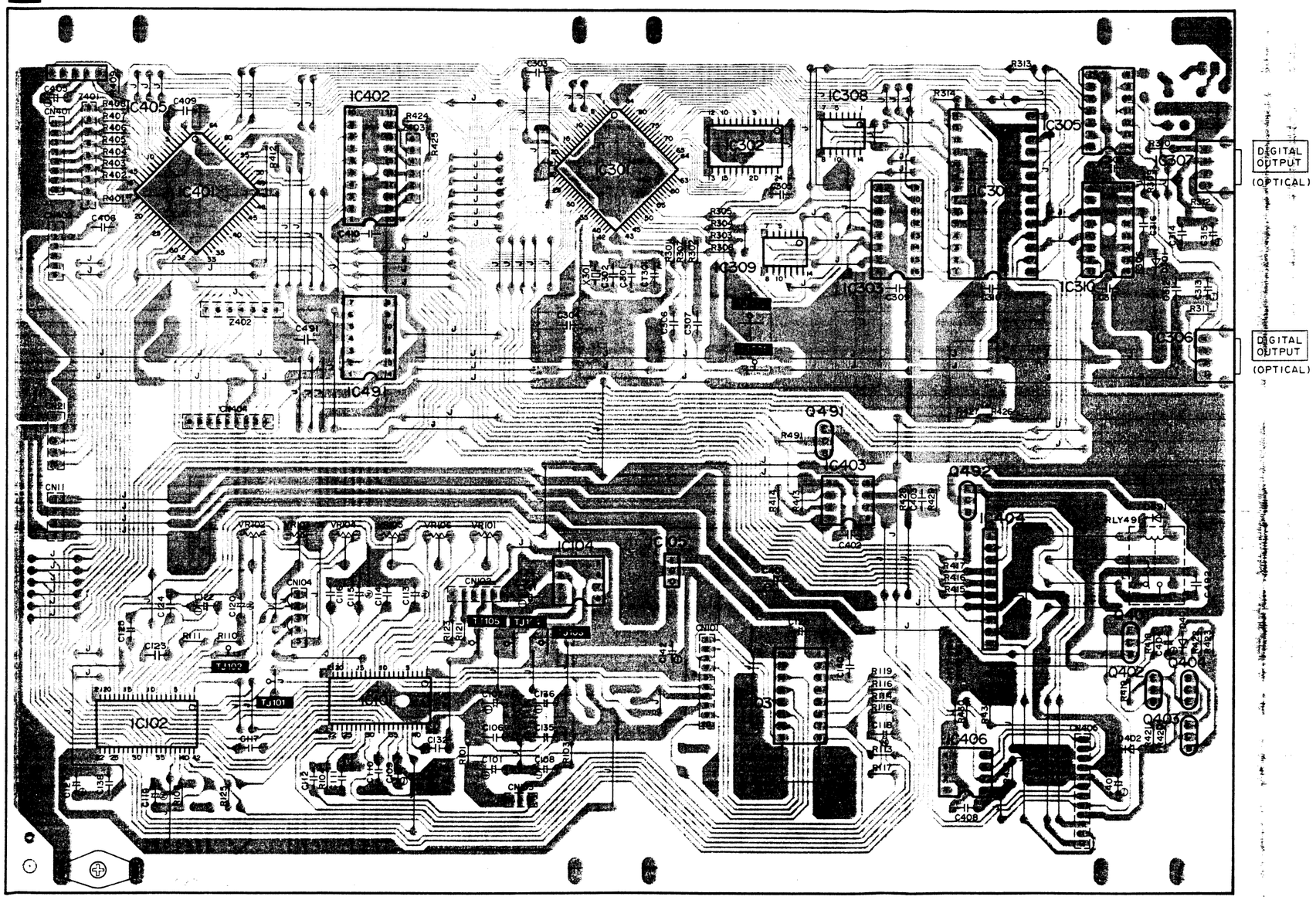

P AC IN P.C.B. For (E, EB, EG) areas.

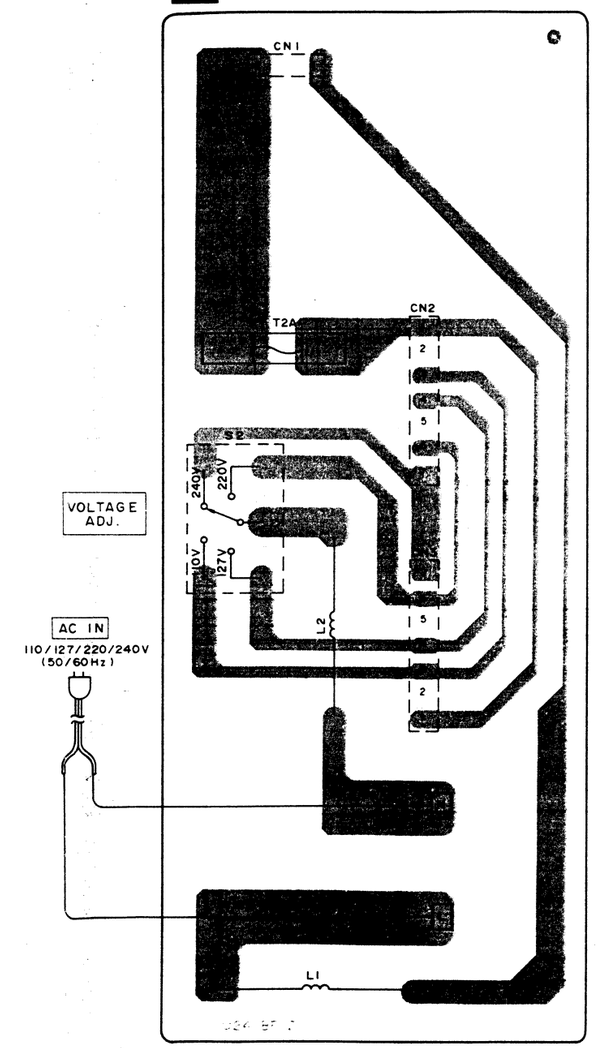

M POWER SUPPLY(L) P.C.B. For [E,EB,EG] areas.

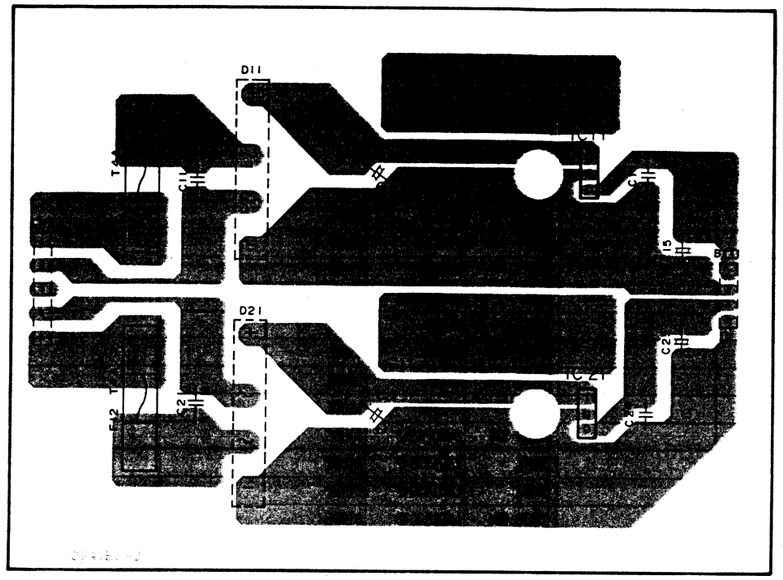

N POWER SUPPLY(R) P.C.B. For [E,EB,EG] areas.

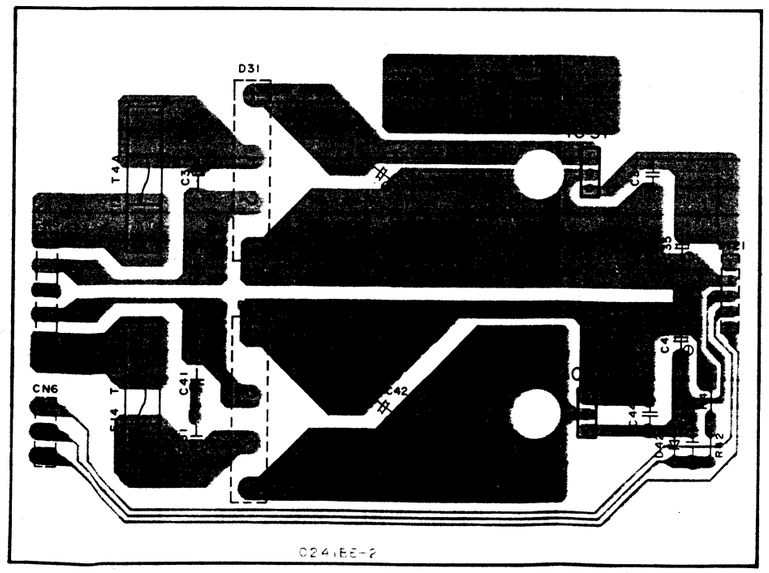

H SENSOR P.C.B.

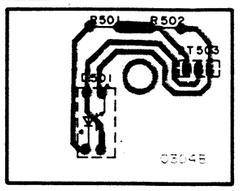

I UP/DOWN MOTOR P.C.B.

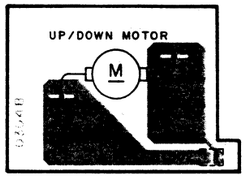

J UP/DOWN SWITCH P.C.B.

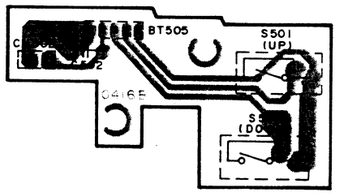

O POWER SWITCH P.C.B.

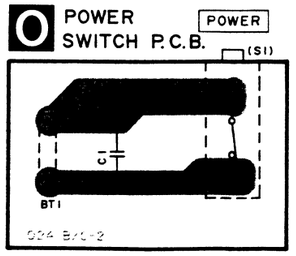

TERMINAL GUIDE OF IC'S, TRANSISTORS AND DIODES

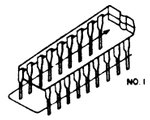

M5218P	8 Pin
AN6562	
AN6914	
LM359N	14 Pin
TC74HC04AP	
TC74HC27AP	
YM3615	16 Pin
TC74HC123P	
TC74HC244AP	20 Pin
CXD1075P	28 Pin
MB88724BPJX1	64 Pin

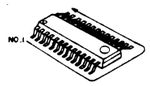

TC74HC74AF	14 Pin
LC3517BML15	24 Pin
AN3821K	
AN8373S	42 Pin
AN8374S	

AN8377N	16 Pin

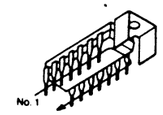

M51953BL	5 Pin

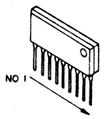

MN1554PJY	64 Pin
MN6622	84 Pin

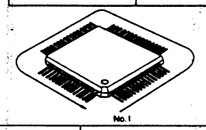

TOTX174-A

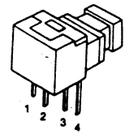

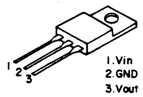

M5F7812L
M5F7808L
M5F78M05L
M5F79M20L
LM2940T5

BA6247	10 Pin

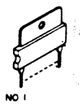

UN4212TA
DTC143ESTP

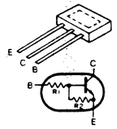

UN4112TA

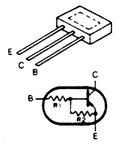

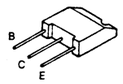

2SA1547QSTV6
2SD1862PRTV6
2SC4010QRTV6

2SD2037DEFTA

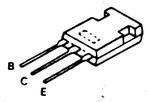

MA165TA

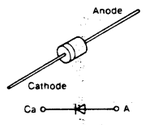

MA4047MTA

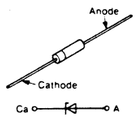

LN013304P
LN014304P
LN018304P

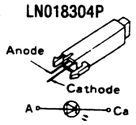

GP1S54
GP1S53V

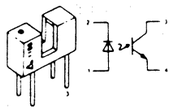

D5SB20

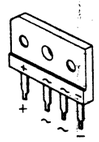

RCDHC-247

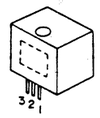

WIRING CONNECTION DIAGRAM

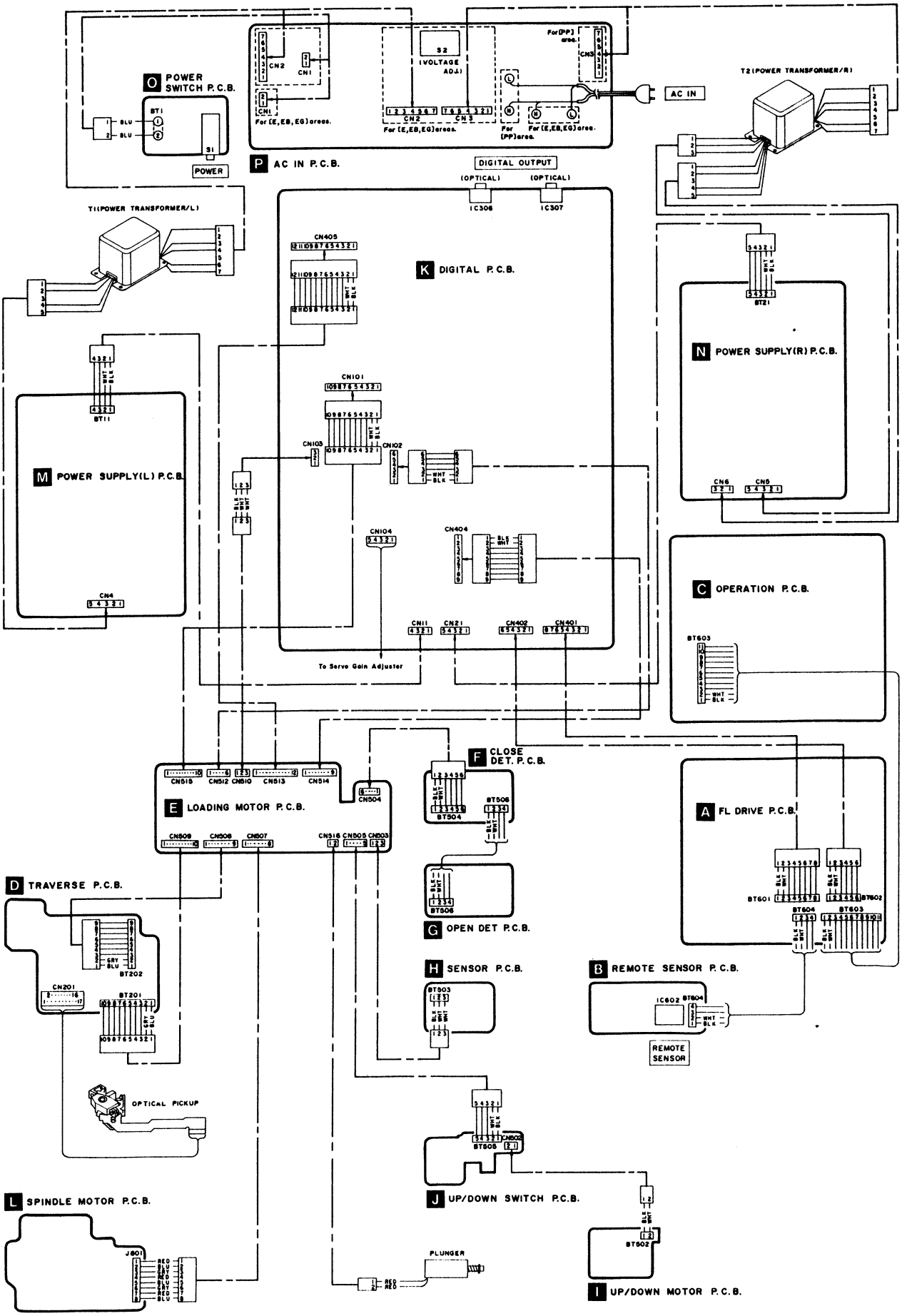

REPLACEMENT PARTS LIST

Notes : • Important safety notice:
Components identified by ⚠ mark have special characteristics important for safety. When replacing any of these components use only manufacturer's specified parts.
• The parenthesized indications in the Remarks columns specify the areas. (Refer to the cover page for area.)
Parts without these indications can be used for all areas.
* Warning: This product uses a laser diode. Refer to caution statements on page 2.
* ACHTUNG:
Die lasereinheit nicht zerlegen.
Die lasereinheit darf nur gegen eine vom hersteller spezifizierte einheit ausgetauscht werden.

Ref. No.	Part No.	Part Name & Description	Remarks
		INTEGRATED CIRCUIT(S)	
IC11	M5F7812L	IC, REGURATOR	
IC21	M5F7808L	IC, REGURATOR	
IC31	M5F78M05L	IC, REGURATOR	
IC41	M5F79M20L	IC, REGURATOR	
IC101	AN8373S	IC, SERVO AMP	
IC102	AN8374S	IC, SERVO PROSESSOR	
IC103	AN8377N	IC, BTL DRIVE	
IC104	M5218P	IC, OPE. AMP	
IC105	LM2940T5	IC, REGURATOR	
IC201, 202	LM359N	IC, I/V CONVERTER	
IC301	MN6622	IC, SIGNAL PROSESSOR	
IC302	LC35178ML15	IC, SRAM	
IC303	YM3615	IC, DIGITAL VOLUME	
IC304	CXD1075P	IC, D/A INTERFACE	
IC305	TC74HC04AP	IC, INVERTER GATE	
IC306, 307	TOTX174-A	IC, DIGITAL OUTPUT	
IC308, 309	TC74HC74AF	IC, D. LATCH	
IC310	TC74HC123P	IC, LOGIC	
IC401	MN1554PJY	IC, MECHANISM CONTROL	
IC402	TC74HC244AP	IC, BUFFER	
IC403	AN1358	IC, OPERATION AMP	
IC404	BA6247	IC, MOTOR DRIVE	
IC405	M51953BL	IC, RESET	
IC406	AN6914	IC, COMPARATOR	
IC491	TC74HC27AP	IC, NOR GATE	
IC601	MB88724BPJX1	IC, OPERATION CONTROL	
IC602	RCD0003	IC, REMOTE CON. RECEIVER	
IC801	AN3821K	IC, SPINDLE MOTOR DRIVE	
		TRANSISTOR(S)	
Q201	2SA1547QSTV6	TRANSISTOR	
Q401	UN4112	TRANSISTOR	
Q402	2SD1862PRTV6	TRANSISTOR	
Q403	2SC4010QRTV6	TRANSISTOR	
Q404	2SD2037DEFTA	TRANSISTOR	
Q491	UN4112	TRANSISTOR	
Q492	DTC143ESTP	TRANSISTOR	
Q503-506	UN4212TA	TRANSISTOR	
Q601-604	UN4212TA	TRANSISTOR	
		DIODE(S)	

Ref. No.	Part No.	Part Name & Description	Remarks
D11	D5SB20	DIODE	⚠
D21	D5SB20	DIODE	⚠
D31	D5SB20	DIODE	⚠
D41	D5SB20	DIODE	⚠
D42	MA4047MTA	DIODE	
D301	MA165	DIODE	
D401, 402	MA165	DIODE	
D491	MA165	DIODE	
D501	GP1S54	DIODE	
D503-506	SVDGP1S53	DIODE	
D601	LN013304P	DIODE	
D602	LN014304P	DIODE	
D603, 604	LN018304P	DIODE	
		HALL ELEMENT(S)	
H801-803	HW101AD	HALL ELEMENT	
		VARIABLE RESISTOR(S)	
VR101	EVND3AA00B14	V. R, BEST EYE ADJ.	
VR102	EVND3AA00B14	V. R, TRACKING GAIN ADJ.	
VR103	EVND3AA00B14	V. R, TRACKING OFFSET ADJ.	
VR104	EVND3AA00B14	V. R, FOCUS GAIN ADJ.	
VR105	EVND3AA00B14	V. R, FOCUS OFFSET ADJ.	
VR106	EVND3AA00B24	V. R, TRACKING BALANCE ADJ.	
		COMPONENT COMBINATION(S)	
Z401	EXBF9E472J	COMPONENT COMBINATION	
Z402	EXBF7E472J	COMPONENT COMBINATION	
Z403	EXBLD4103G	COMPONENT COMBINATION	
Z601	EXBF7E104J	COMPONENT COMBINATION	
Z602, 603	EXBF9E104J	COMPONENT COMBINATION	
Z604	EXBF7E472J	COMPONENT COMBINATION	
		COIL(S)	
L1, 2	SLQX400-D	COIL	⚠
		TRANSFORMER(S)	
T1	RFKCLZ1000A	TRANSFORMER ASS'Y	⚠
T2	RFKCLZ1000B	TRANSFORMER ASS'Y	⚠

Ref. No.	Part No.	Part Name & Description	Remarks
		OSCILLATOR(S)	
X301	RSXB16M9A01	OSCILLATOR	
X601	RSXY4M00M02	OSCILLATOR	
		DISPLAY TUBE	
FL601	RSL0026-F	DISPLAY TUBE	
		FUSE(S)	
F1	XBA2C20TB0	FUSE 250V T2A	⚠
F11-14	XBA2C40TB0	FUSE 250V T4A	⚠
		SWITCH(ES)	
S1	ESB99713V	SW, POWER	⚠
S2	SSR187-1	SW, VOLTAG SELECTOR	⚠
S501	RSH1A011-1	SW, UP	
S502	SSPD12	SW, DOWN	
S601	RSM0003D	SW, SKIP(R)	
S602	RSM0003D	SW, SKIP(F)	
S603	RSM0003D	SW, PLAY	
S604	RSM0003D	SW, PAUSE	
S605	RSM0003D	SW, STOP	
S606	RSM0003D	SW, OPEN/CLOSE	
		CABLE(S)	
BT1	REX9135	CONNECTOR UNIT(2P)	
BT11	REX9140S-1	CONNECTOR UNIT(4P)	
BT21	REX9141S-1	CONNECTOR UNIT(5P)	
BT201	REX0154	CONNECTOR UNIT(10P)	
BT202	REX0155	CONNECTOR UNIT(9P)	
BT502	REX9126	CONNECTOR UNIT(2P)	
BT503	REX9123	CONNECTOR UNIT(3P)	
BT504	REX0283	CONNECTOR UNIT(6P)	
BT505	REX0282	CONNECTOR UNIT(5P)	
BT506	REX0281	CONNECTOR UNIT(4P)	
BT601	REX9137S-2	CONNECTOR UNIT(8P)	
BT602	REX9139S-2	CONNECTOR UNIT(6P)	
BT603	REX9134-1	CONNECTOR UNIT(11P)	
BT604	REX9136	CONNECTOR UNIT(4P)	
J801	REX0153	CONNECTOR UNIT(8P)	
		CONNECTOR(S)	
CN1	SFDJ5285-02A	CONNECTOR(2P)	
CN2, 3	RJP1A6007	CONNECTOR(7P)	
CN4, 5	RJP1A3505	CONNECTOR(5P)	
CN6	RJP1A3303	CONNECTOR(3P)	

Ref. No.	Part No.	Part Name & Description	Remarks
CN11	SJT3415	CONNECTOR(4P)	
CN21	SJT3511	CONNECTOR(5P)	
CN101	RJP10G18ZA	CONNECTOR(10P)	
CN102	RJP6G18ZA	CONNECTOR(6P)	
CN103	RJP3G18ZA	CONNECTOR(3P)	
CN104	EMCS0552M	CONNECTOR(5P)	
CN201	SJSD1727M	CONNECTOR(17P)	
CN401	RJP8G18ZA	CONNECTOR(8P)	
CN402	RJP6G18ZA	CONNECTOR(6P)	
CN404	RJP9G18ZA	CONNECTOR(9P)	
CN405	RJP12G18ZA	CONNECTOR(12P)	
CN502	RJP2G17ZA	CONNECTOR(2P)	
CN503	RJP3G17ZA	CONNECTOR(3P)	
CN504	RJP6G17ZA	CONNECTOR(6P)	
CN505	RJP5G17ZA	CONNECTOR(5P)	
CN507	RJP8G17ZA	CONNECTOR(8P)	
CN508	RJP9G17ZA	CONNECTOR(9P)	
CN509	RJP10G17ZA	CONNECTOR(10P)	
CN510	RJP3G18ZA	CONNECTOR(3P)	
CN512	RJP6G18ZA	CONNECTOR(6P)	
CN513	RJP12G18ZA	CONNECTOR(12P)	
CN514	RJP9G18ZA	CONNECTOR(9P)	
CN515	RJP10G18ZA	CONNECTOR(10P)	
CN516	RJP2G17ZA	CONNECTOR(2P)	
		TRIMMER	
CT301	ECRHA020D41	TRIMMER	
		RELAY(S)	
RLY491	RSYG5A237P12	RELAY	

Notes : • Important safety notice:
Components identified by ⚠ mark have special characteristics important for safety. When replacing any of these components use only manufacturer's specified parts.
• The parenthesized indications in the Remarks columns specify the areas. (Refer to the cover page for area.)
Parts without these indications can be used for all areas.

Ref. No.	Part No.	Part Name & Description	Remarks
		CABINET AND CHASSIS	
1	RGQ0029	SPACER	
2	RFKXHK1000-A	CABINET	
3	RGMD174-1	SIDE WOOD	
4	RFKNLZ10000AA	BUTTON BASE ASS'Y	
5	RGMD177	ORNAMENT	
6	RGMD178	TRAY ORNAMENT	
7	RFKNLZ1000E	REAR PANEL ASS'Y	(E)
7	RFKNLZ10000EB	REAR PANEL ASS'Y	(EB)
8	RFKNLZ1000CA	OPERATION BUTTON ASS'Y	
9	RFKNLZ10000DA	SKIP KNOB ASS'Y	
10	RKLD012	CHASSIS	
10-1	RKAD035	FOOT	
10-2	XTB4+20JFZ	SCREW	
10-3	SKYD4	FOOT RUBBER	
11	RKWD063	ORNAMENT	
12	RFKGLZ1000-A	FRONT PANEL ASS'Y	
13	RKWD065-2	FL FILTER	
15	RMAD211-1	FRAME, FRONT	
16	RMAD213	ANGLE(L)	
17	RMAD214	ANGLE(R)	
18	RFKNLZ10000BA	POWER BUTTON BASE ASS'Y	
19	SJT777	POWER TERMINAL	
20	RMAD224	PLATE	
21	RMAD252	MECH ANGLE(L)	
22	RMAD253	MECH ANGLE(R)	
23	RMAD255	SIDE ANGLE(L)	
24	RMAD256	SIDE ANGLE(R)	
25	RMBD116	SPRING	
26	RMFD050	SPONGE	
27	RMGD013	TRANS RUBBER	
28	RMGD117	SIDE WOOD RUBBER	
29	RMQD164	BUSH	
30	RFKDLZ1000-A	POWER KNOB ASS'Y	
31	RMDD020	SPACER	
32	RMDD024	SPACER	
33	SHR127	CORD BUSHING	(E, EG)
33	SHR129	CORD BUSHING	(EB)
34	SKL241	BACK GARD	
35	SNE4065	NUT	
36	SNE98	SCREW SHEET	
37	XSS5+35FVC	SCREW	
38	RWS0001	WASHER	
39	XWE5X12FVC	WASHER	
40	XUC2FT	E RING	

Ref. No.	Part No.	Part Name & Description	Remarks
41	XWG3FZ	WASHER	
42	XWA3BFZ	WASHER	
43	XWE3FZ	WASHER	
44	SFDAB31ED1	POWER CORD	⚠(E, EG)
44	SJA192	POWER CORD	⚠(EB)
45	SJT390	FUSE HOLDER	⚠
46	SHRD58	CLAMPER	
47	REX9128S-1	CONNECTOR UNIT(10P)	
48	REX9129S-1	CONNECTOR UNIT(6P)	
49	REX9130S-1	CONNECTOR UNIT(3P)	
50	REX9131S-1	CONNECTOR UNIT(9P)	
51	REX9132S-1	CONNECTOR UNIT(12P)	
52	SUWD139-1	FL HOLDER	
53	SRDJ001N14E	CONNECTOR UNIT(5P)	
54	VJA1034	PROTECTION CAP	
55	RMZD106	INSULATING SHEET	
		SCREWS	
N1	XTS3+8FFC	SCREW	
N2	RHD30011	SCREW	
N3	XSN3+8FB	SCREW	
N4	XTBS3+8JFZ1	SCREW	
N5	XTB3+16JFZ	SCREW	
N6	XTB3+6JFZ	SCREW	
N7	XTB3+8JFB	SCRWE	
N8	XTB4+16FFZ	SCRWE	
N9	XTB4+12JFZ	SCREW	
N10	XVE3A6FZS	SCREW	
N12	XYN3+C8FZ	SCREW	
		TRAVERSE DECK	
101	SHRD176-2	BRUSH HOLDER	
102	GTW-3	RING	
103	RFKNLZ1000NA	SOLENOID ASS'Y	
103A	RMBD117	SPRING	
104	RMBD118	LOCK SPRING	
105	RMGD079	FLOATING RUBBER	
106	RMQD089	SOLENOID BASE	
107	RMQD091	PLATE	
108	RMQD092	PROTECTION CAP	
109	RMQD126	RING	
110	RMRD218	LOCK BASE	
111	RMRD219	LOCK UNIT	
112	RMRD220	RACK PLATE	
113	RMUD044	SUB SHAFT	

Ref. No.	Part No.	Part Name & Description	Remarks
114	RMWD002	SPASER	
115	RRAD012	YOKE UNIT(A)	
117	RXDD009	BEARING	
118	RFKNLZ1000KA	ROTER UNIT ASS'Y	
119	RXMD067	TRAVERSE BASE UNIT	
120	SILD01202	EARTH WIRE	
121	RXQD087	COIL UNIT	
122	RXQD095	TURN TABLE UNIT	
123	SHGD148	STOPPER RUBBER	
125	SHWD33	WASHER(A)	
126	SHWD34	WASHER(B)	
127	SRQA010N04	TURN TABLE SPRING	
128	SR00R050N01	TURN TABLE WASHER	
129	SUWD112-1	GUIDE SHAFT HOLDER	
130	SUXD123-1	GUIDE SHAFT	
131	RFKNLZ10000LA	OPTICAL PICKUP ASS'Y	⚠
132	SOYD22	YOKE(B)	
133	XNG2E	NUT	
135	XSN2+3	SCREW	
136	XTB2+5J	SCREW	
137	XTB3+4J	SCREW	
138	XTN2+5G	SCREW	
139	XTN26+5J	SCREW	
140	XWA3B	WASHER	
151	RDG0125	GEAR	
152	RFKPLZ1000AA	MOTOR ASS'Y(UP/DOWN)	
153	RFKNLZ1000A	DRIVE SHAFT ASS'Y	
154	RDP0027	TRANSFER PULLEY(1)	
155	RDP0028	TRANSFER PULLEY(2)	
156	RDP0029	DRIVE PULLEY	
157	RDV0011	TIMING BELT	
158	RHD26002	SCREW	
159	RHG3032ZA	CUSHION RUBBER	
160	RHW27001	WASHER	
161	RFKNLZ1000B	CLAMP PLATE HOLDER	
162	RMAD231	ANGLE	
163	RMAD232	ANGLE	
164	RMAD233	ANGLE	
165	RFKNLZ10001A	PLATE ASS'Y(1), PULLEY	
166	RFKNLZ1000JA	PLATE ASS'Y(2), PULLEY	
167	RFKNLZ1000GA	PLATE ASS'Y MOTOR	
168	RMAD238-2	SHAFT HOLDER(1)	
169	RMAD241	SHAFT HOLDER	
170	RMBD120	FLOATING SPRING(A)	
171	RMBD121	FLOATING SPRING(B)	
172	RMBD122	TENTION SPRING	
173	RMCD038	PLATE	
174	RMCD058	GUID SHAFT HOLDER	
175	RMCD064	EARTH SPRING	
176	RMGD085	SPASER RUBBER	
177	RMGD086	STOPPER RUBBER	
178	RMGD104-1	SPASER	
179	RMHD012	MAGNET	

Ref. No.	Part No.	Part Name & Description	Remarks
180	RMQD099-2	ROADING BASE	
181	RFKNLZ10000HA	SUB BASE ASS'Y	
182	RMRD367	TRAY GUIDE	
183	RMRD237	FLANGE	
184	RMSD194	GUIDE SHAFT(L)	
185	RMSD195-1	GUIDE SHAFT(R)	
186	RMSD197-2	SHAFT	
187	RMSD228	SHAFT	
188	RFKPLZ10000BA	MOTOR ASS'Y(LOADING)	
189	RXQD089-1	TRAY UNIT	
191	SHGB26	DUST COVER CUSHION	
192	SHGD154	FLOATING SPASER	
193	SHWD27	RING	
194	SILD12011	EARTH LEAD UNIT(A)	
196	RMRD305	CLAMPER	
197	RMGD121	BELT	
198	SNSD10	SCREW	
199	SNSD33	SCREW	
200	SOYD2	CLAMPER YOKE	
202	XTB26+4J	SCREW	
203	XTB3+10G	SCREW	
204	XTB3+6JFZ	SCREW	
205	XTN2+4J	SCREW	
206	XUC3FT	E RING	
207	XWE4A8	WASHER	
208	XWE4E8FY	WASHER	
209	XYN26+C4	SCREW	
210	XYN26+F6	SCREW	
211	XWS8	WASHER	
212	XYN3+C8	SCREW	
213	SNSD9	SCREW	
214	RMAD218	ORNAMENT	
215	XYN3+C6FZ	SCREW	
216	XQN17+C6	SCREW	
		PACKING MATERIAL	
P1	RPGD598	PACKING CASE	
P2	RPND240-2	PAD	
P3	SPH6434	PROTECTION SHEET	
		ACCESSORIES	
A1	RQT0655-G	INSTRUCTION MANUAL	(EB)
A2	RQT0656-D	INSTRUCTION MANUAL	(EG)
A3	RFKSLZ1000E	INST. MANUAL ASS'Y	(E)
A4	RQAD013	WARRANTY CARD	
A5	RQCB0169	SERVICENTER LIST	
A6	RAK-SL507W	REMOTE CONTROLLER	
A7	UM-4NE/2S	BATTERY	
A8	RP-CA5010	OPTICAL OUTPUT CABLE	
A9	XZB15X25C03	PROTECTION BAG(COAD)	
A10	RKXD020-1W	BATTERY COVER	

EXPLODED VIEW

• **Cabinet and chassis part**

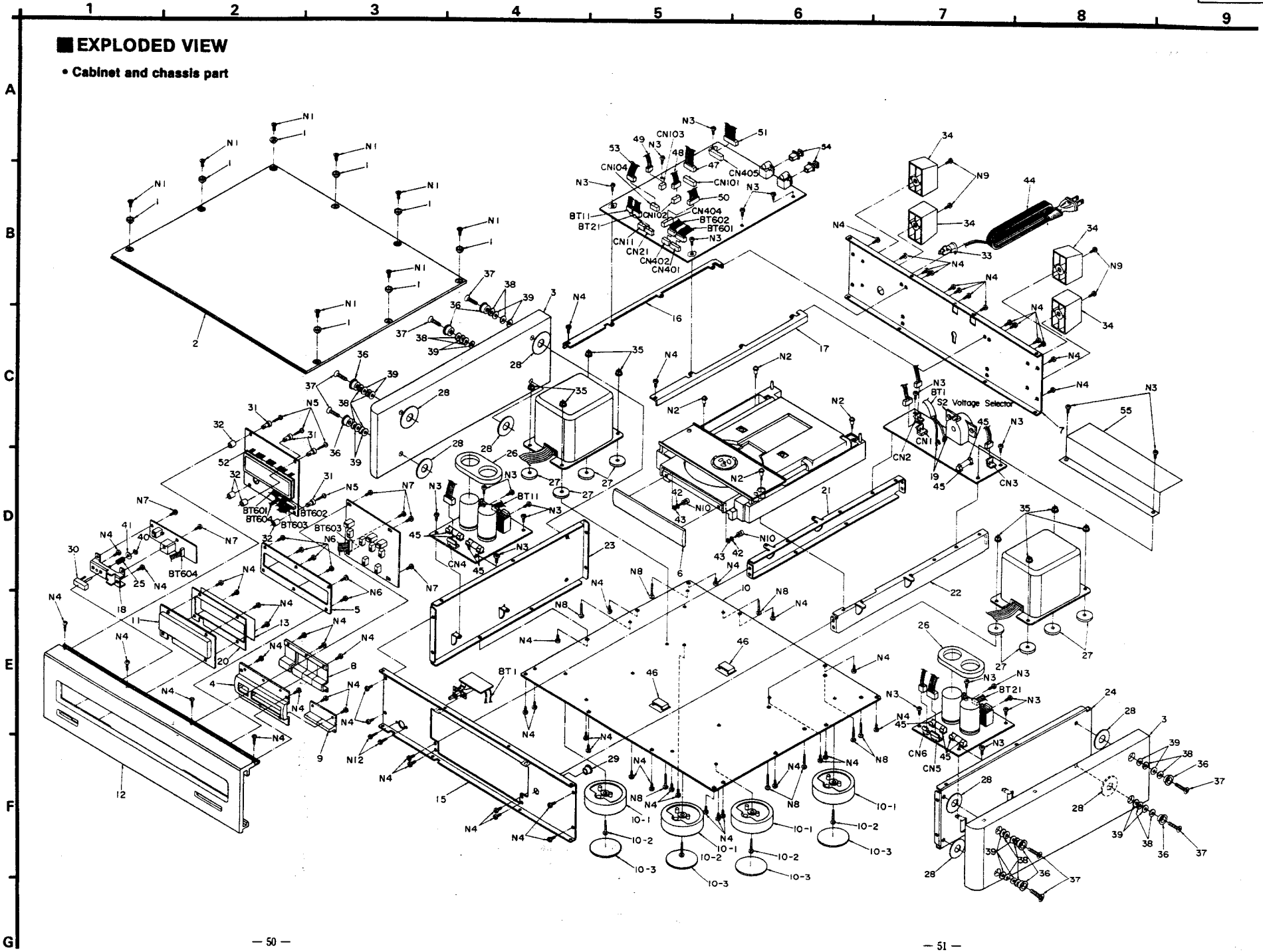

SL-Z1000

• Traverse deck parts

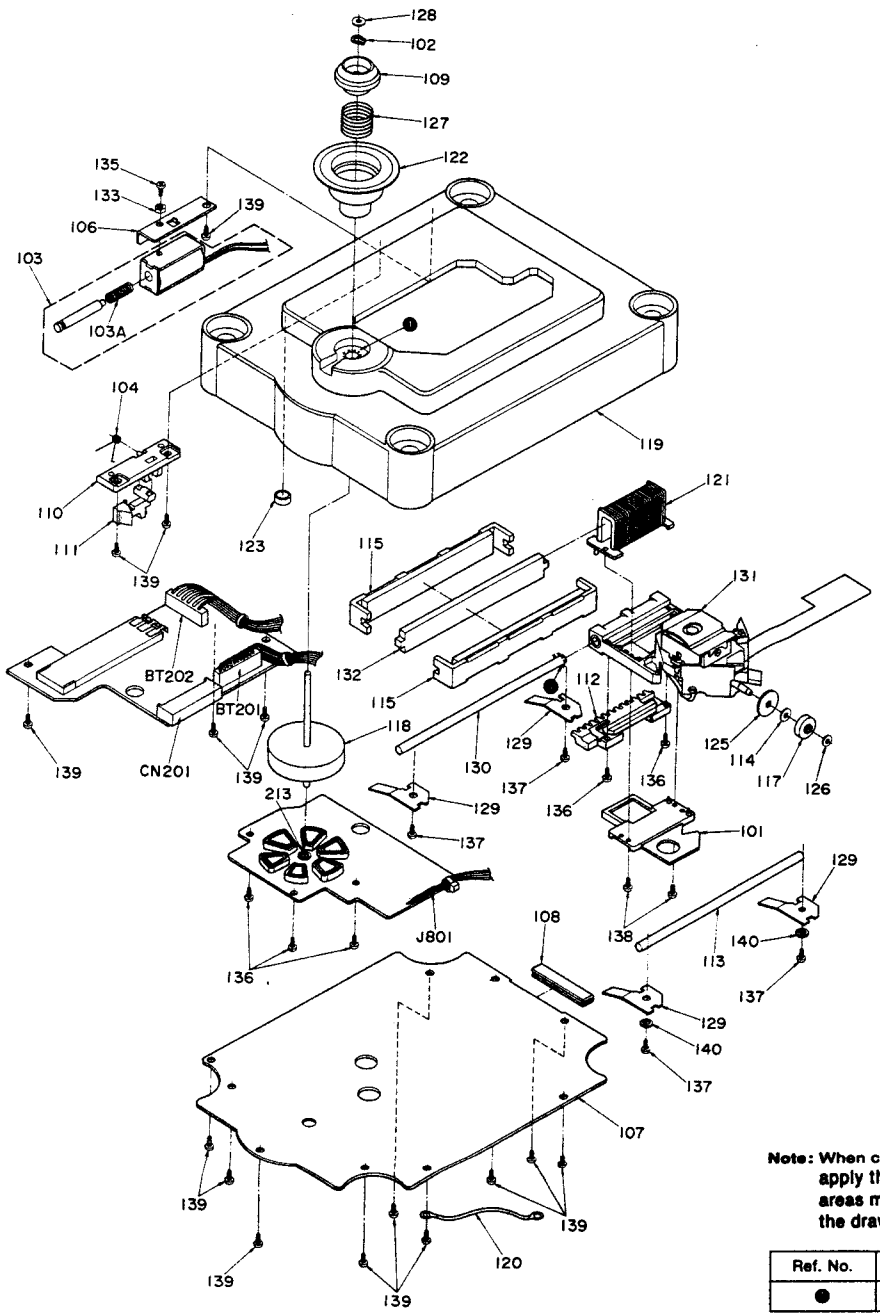

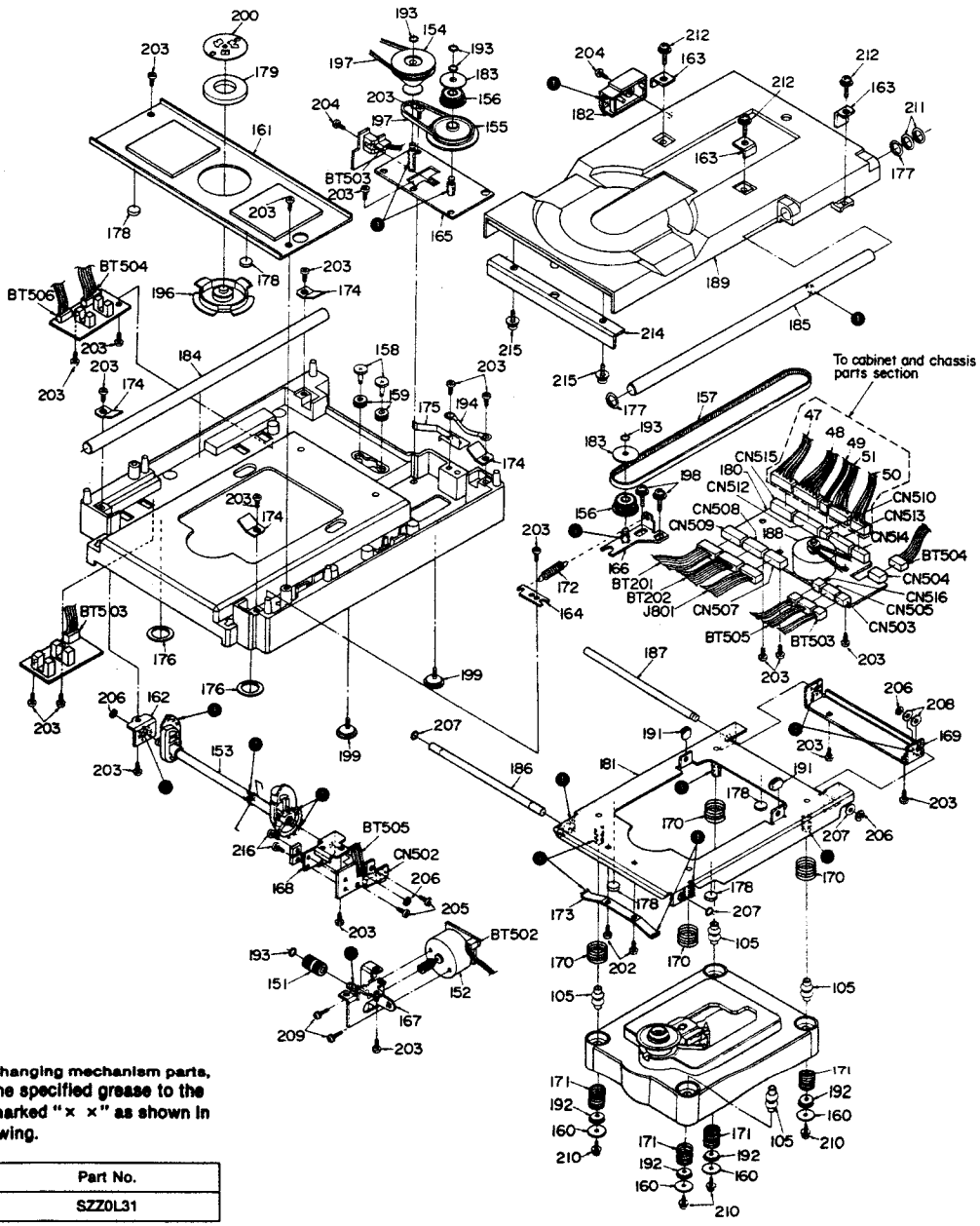

Note: When changing mechanism parts, apply the specified grease to the areas marked "× ×" as shown in the drawing.

Ref. No.	Part No.
●	SZZ0L31

RESISTORS & CAPACITORS

Notes : • Capacity values are in microfarads (uF) unless specified otherwise, P=Pico-farads (pF) F=Farads (F)
• Resistance values are in ohms, unless specified otherwise, 1K=1,000(OHM) , 1M=1,000k(OHM)

Ref. No.	Part No.	Values & Remarks
		RESISTORS
R41, 42	ERDS2TJ392T	1/4W 3.9K
R101	ERDS2TJ561	1/4W 560
R103	ERDS2TJ561	1/4W 560
R104	ERDS2TJ471	1/4W 470
R108	ERDS2TJ224T	1/4W 220K
R110	ERDS2TJ222	1/4W 2.2K
R111	ERDS2TJ104	1/4W 100K
R113	ERDS2TJ472	1/4W 4.7K
R114	ERDS2TJ683	1/4W 68K
R116	ERDS2TJ562	1/4W 5.6K
R117	ERDS2TJ123	1/4W 12K
R118	ERDS2TJ333	1/4W 33K
R119	ERDS2TJ223	1/4W 22K
R121	ERDS2TJ183T	1/4W 18K
R123	ERDS2TJ183T	1/4W 18K
R125	ERDS2TJ222	1/4W 2.2K
R201-204	ERDS2TJ102	1/4W 1K
R205	ERDS2CKF4702	1/4W 47K
R206	ERDS2TKF1802	1/4W 18K
R207	ERDS2TJ101	1/4W 100
R208	ERDS2CKF4702	1/4W 47K
R209	ERDS2TKF1802	1/4W 18K
R210	ERDS2TJ101	1/4W 100
R211	ERDS2TJ682T	1/4W 6.8K
R212	ERDS2TJ271	1/4W 270
R213	ERDS2TJ223	1/4W 22K
R214	ERDS2TJ103	1/4W 10K
R215	ERDS2TJ101	1/4W 100
R216	ERDS2TJ682T	1/4W 6.8K
R217	ERDS2TJ471	1/4W 470
R218	ERDS2TJ120T	1/4W 12
R301-305	ERDS2TJ561	1/4W 560
R306	ERDS2TJ153	1/4W 15K
R307-310	ERDS2TJ561	1/4W 560
R311, 312	ERDS2TJ822	1/4W 8.2K
R313	ERDS2TJ561	1/4W 560
R314	ERDS2TJ105T	1/4W 1M
R401-408	ERDS2TJ221	1/4W 220
R409	ERDS2TJ472	1/4W 4.7K
R412	ERDS2TJ104	1/4W 100K
R413	ERDS2TJ273	1/4W 27K
R414	ERDS2TJ183T	1/4W 18K
R415-417	ERDS2TJ103	1/4W 10K
R418	ERDS2TJ123	1/4W 12K
R419	ERDS2TJ103	1/4W 10K
R420, 421	ERDS2TJ101	1/4W 100

Ref. No.	Part No.	Values & Remarks
R422	ERDS2TJ333	1/4W 33K
R423	ERDS2TJ683	1/4W 68K
R424	ERDS2TJ103	1/4W 10K
R425	ERDS2TJ183T	1/4W 18K
R426, 427	ERDS2TJ102	1/4W 1K
R428	ERDS2TJ153	1/4W 15K
R429	ERDS2TJ473	1/4W 47K
R430, 431	ERDS2TJ332	1/4W 3.3K
R432	ERDS2TJ103	1/4W 10K
R491	ERDS2TJ102	1/4W 1K
R501	ERDS2TJ101	1/4W 100
R502	ERDS2TJ103	1/4W 10K
R503-506	ERDS2TJ101	1/4W 100
R507-510	ERDS2TJ103	1/4W 10K
R601	ERDS2TJ101	1/4W 100
R602	ERDS2EJ121	1/4W 120
R603, 604	ERDS2TJ221	1/4W 220
R801	ERJ8GEYK2R7V	1/8W 2.7
R802	ERJ8GEYJ270V	1/8W 27
R803	ERJ8GEYJ560V	1/8W 56
R804	ERJ8GEY0R00V	
		CHIP JAMPER(S)
TJ101-105	ERD25V0R00T	
TJ301, 302	ERD25V0R00T	
		CAPACITORS
C1	ECKWKC103PF2	400V 0.01U ⚠
C11	ECQV1H104JZ3	50V 0.1U
C12	ECESX1J332BA	63V 3300U
C14	ECQV1H104JZ3	50V 0.1U
C15	ECA1EPXS221B	25V 220U
C21	ECQV1H104JZ3	50V 0.1U
C22	ECESX1J332BA	63V 3300U
C24	ECQV1H104JZ3	50V 0.1U
C25	ECA1EPXS221B	25V 220U
C31	ECQV1H104JZ3	50V 0.1U
C32	ECESX1J332BA	63V 3300U
C34	ECQV1H104JZ3	50V 0.1U
C35	ECA1EPXS221B	25V 220U
C41	ECQV1H104JZ3	50V 0.1U
C42	ECESX1J332BA	63V 3300U
C44	ECQV1H104JZ3	50V 0.1U
C45	ECA1EPXS221B	25V 220U
C46	ECQV1H104JZ3	50V 0.1U
C51	ECQV1H104JZ3	50V 0.1U
C101	ECEA0JKA101B	6.3V 100U

Ref. No.	Part No.	Values & Remarks
C106	ECQV1H104JZ3	50V 0.1U
C107, 108	ECEA0JKA101B	6.3V 100U
C109	ECEA1HKA010B	50V 1U
C110	ECCR1H681K5	50V 680P
C111	ECQV1H474JZ3	50V 0.47U
C112	ECCR1H331K5	50V 330P
C113	ECEA1HKN010B	50V 1U
C114	ECQM1H333JZ	50V 0.033U
C115	ECEA1HKN010B	50V 1U
C116	ECQM1H333JZ	50V 0.033U
C117	ECKT1H102KB	50V 1000P
C118	ECEA1EKN4R7B	25V 4.7U
C119, 120	ECEA1CKN4R7B	16V 4.7U
C122	ECEA0JKA220B	6.3V 22U
C123	ECQV1H104JZ3	50V 0.1U
C124	ECQV1HB23JZ	50V 0.082U
C125	ECQV1HB24JZ3	50V 0.82U
C127	ECEA1AF101B	10V 100U
C128	ECEA1CKA101B	16V 100U
C132	ECQV1H104JZ3	50V 0.1U
C135	ECQV1H104JZ3	50V 0.1U
C136	ECEA0JKA101B	6.3V 100U
C138	ECQV1H104JZ3	50V 0.1U
C140	ECQB1H103JZ	50V 0.01U
C141, 142	ECEA1AF101B	10V 100U
C201, 202	ECBT1H271KB5	50V 270P
C205	ECEA1CKS100L	16V 10U
C206	ECEA1CKS220	16V 22U
C207	ECBT1H220JC5	50V 22P
C208, 209	ECBT1E223ZF	25V 0.022U
C212	ECBT1E223ZF	25V 0.022U
C213, 214	ECBT1H470J5	50V 47P
C215	ECEA1CKS220	16V 22U
C301, 302	ECCR1H220JC5	50V 22P
C303-306	ECQV1H104JZ3	50V 0.1U
C307	ECQB1H103JZ	50V 0.01U
C308-312	ECQV1H104JZ3	50V 0.1U
C313	ECEA0JKA101B	6.3V 100U
C314	ECQV1H104JZ3	50V 0.1U
C315	ECEA0JKA101B	6.3V 100U
C316	ECQB1H103JZ	50V 0.01U
C401	ECEA1CKA101B	16V 100U
C402	ECQV1H104JZ3	50V 0.1U
C403	ECQB1H103JZ	50V 0.01U
C404	ECEA1CK100B	16V 10U
C405	ECEA1HKA0R1B	50V 0.1U
C406	ECQB1H103JZ	50V 0.01U
C407	ECEA1CKA101B	16V 100U
C408-410	ECQV1H104JZ3	50V 0.1U

Ref. No.	Part No.	Values & Remarks
C491	ECQV1H104JZ3	50V 0.1U
C492	ECQB1H103JZ	50V 0.01U
C501	ECBT1C103MS5	16V 0.01U
C502	ECQB1H103JZ	50V 0.01U
C601, 602	ECQV1H104JZ3	50V 0.1U
C603	ECEA0JKA101B	6.3V 100U
C801	ECUV1H123KBM	50V 0.012U
C802	ECEV1HVR47R	50V 0.47U
C803-805	ECEV1CV100R	16V 10U
C806-808	ECEV1CAN100P	16V 10U

■ PACKING

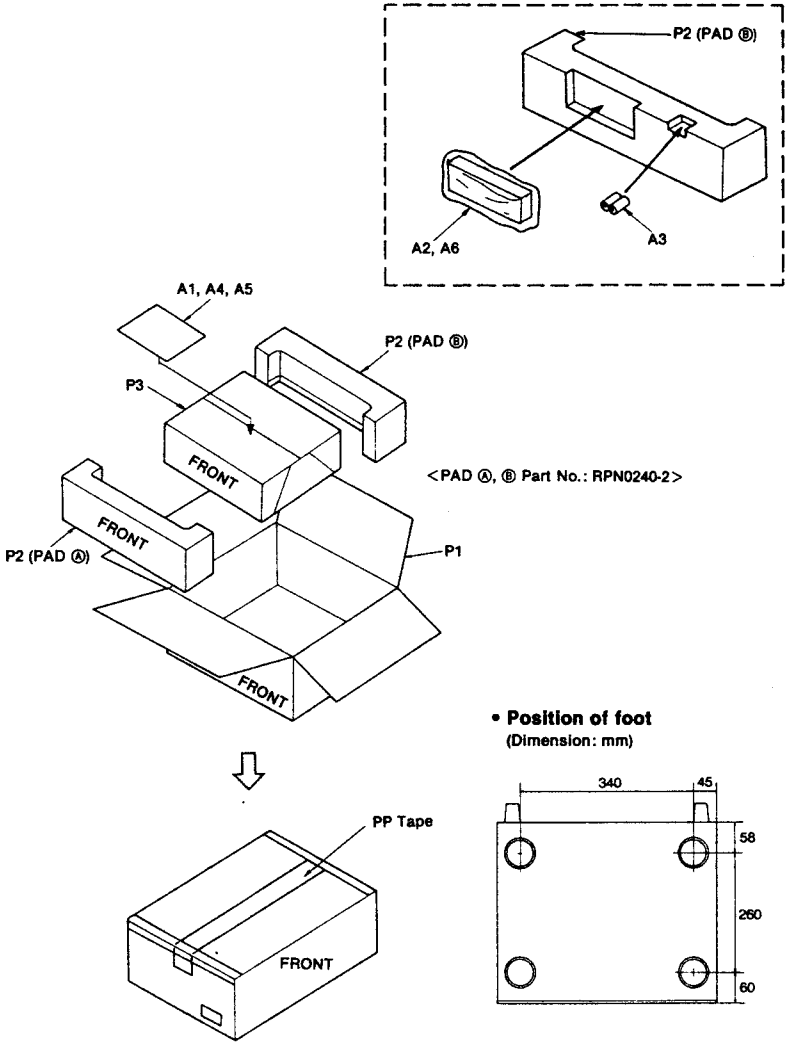

• **Position of foot**
(Dimension: mm)

Printed in Japan
H901105000 HH/TN